Oleo-Mac

PWT 250

Rozkres je dokumentace výrobce (© příslušný výrobce) a slouží k identifikaci dílů. Pro výběr dílu se vždy řiďte katalogovým číslem.

Dotazione Standard

Standard Equipment

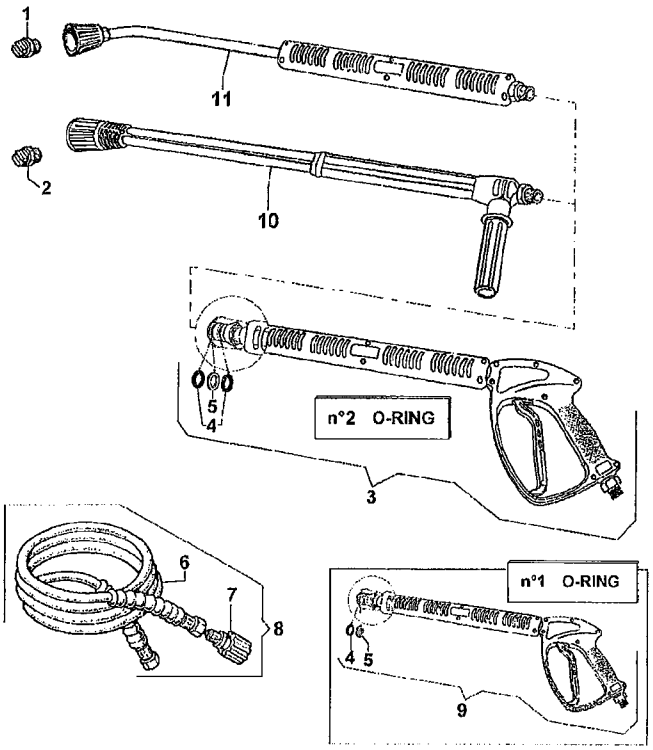

N°	Cod.	Descrizione	*Description*	Note	Q.ty	Model
1	3400 0420	Ugello Acqua	*Water Nozzle*	25 04 1/4" Meg (Blister COMET)	1	11/150 - 12/170
	3400 0419	Ugello Acqua	*Water Nozzle*	25 045 1/4" Meg (Blister COMET)	1	12/140 16/250
	3400 0422	Ugello Acqua	*Water Nozzle*	25 05 1/4" Meg (Blister COMET)	1	13/150 16/210
2	3400 0391	Ugello Detergente	*Detergent Nozzle*	25 40 1/4" Meg (Blister COMET)	1	Solo / *Only* 16/210 - 16/250
3	2410 0114	Pistola	*Spray gun*	n°2 O-rings (Blister COMET)	1	
4	1210 0084	Guarnizione OR Viton®	*Viton® O-Ring*	Ø 2,62X 9,13	2	
5	0009 0116	Anello BK	*BK ring*	2,62X 9,3	2	
6	3208 1012	Tubo Alta Pressione	*H.P. Hose*	R1 1/4" L = 8 m (Blister COMET)	1	11/150 - 12/140 13/150 - 12/170
	3301 0745	Tubo Alta Pressione	*H.P. Hose*	R2 5/16" L = 10 m	1	16/210 - 16/250
7	1407 0027	Raccordo	*Coupling*	M22X1,5- G3/8	1	16/210 - 16/250
8	3301 0776	Tubo Alta Pressione	*H.P. Hose*	R2 5/16" L = 10 m (Blister COMET)	1	16/210 - 16/250
9	2410 0112	Pistola	*Spray gun*	n°1 O-ring (Blister COMET)	1	
10	3301 0941	Kit Lancia Canna Doppia	*Double Lance Kit*	L=700mm (Blister COMET)	1	Solo / *Only* 16/210 - 16/250
11	3301 0976	Kit Tubo Lancia	*Lance Kit*	L=700mm (Blister COMET)	1	Solo / *Only* 11/150 - 12/140 13/150 - 12/170

FDX

COMPLESSIVO MACCHINA / *FRAME AND CHASSY ASSEMBLY* : FDX11/150 - FDX12/140 BENZINA/*GASOLINE*

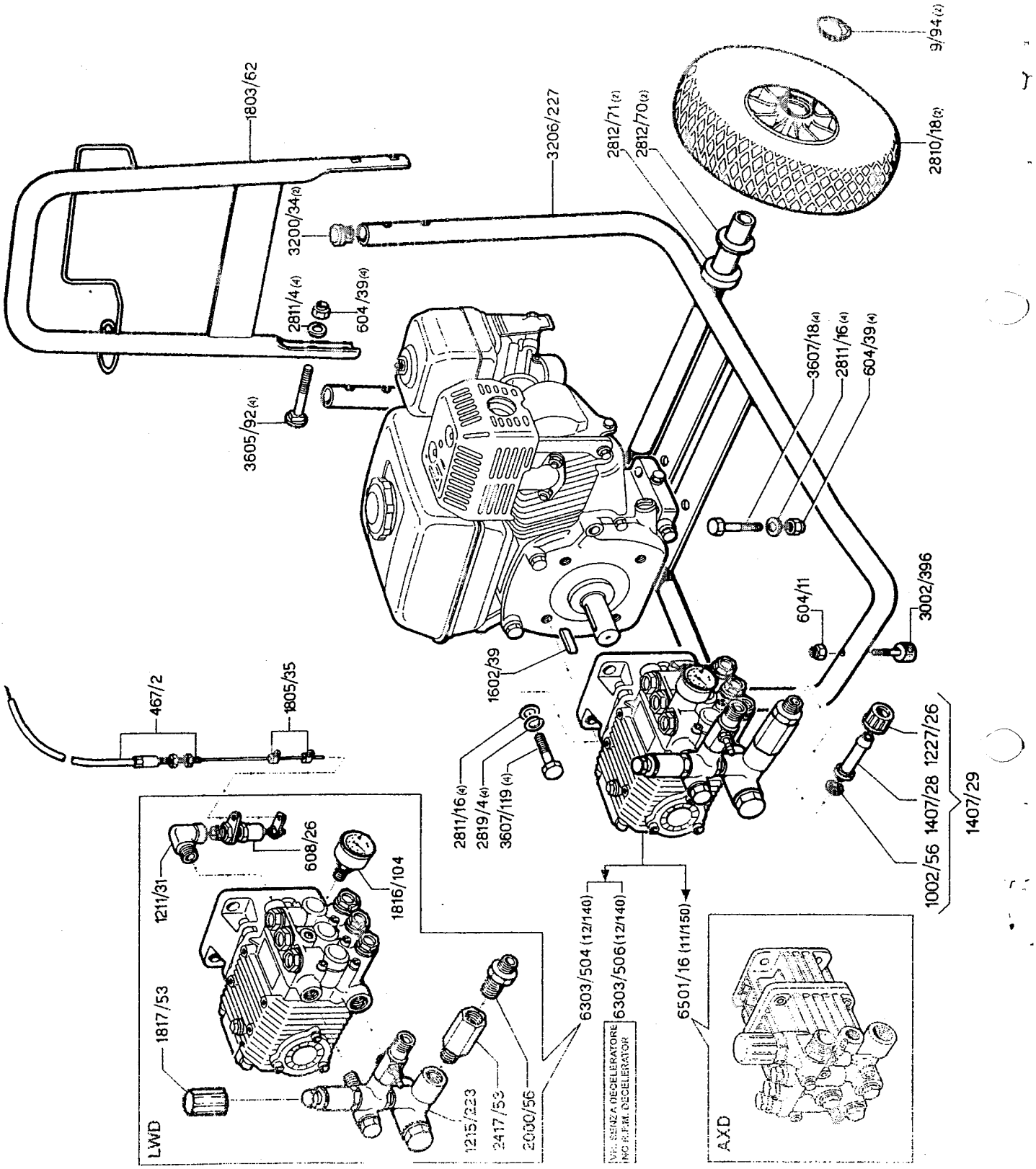

FDX

• POMPA / PUMP: AXD (FDX 11/150 BENZINA/GASOLINE) •

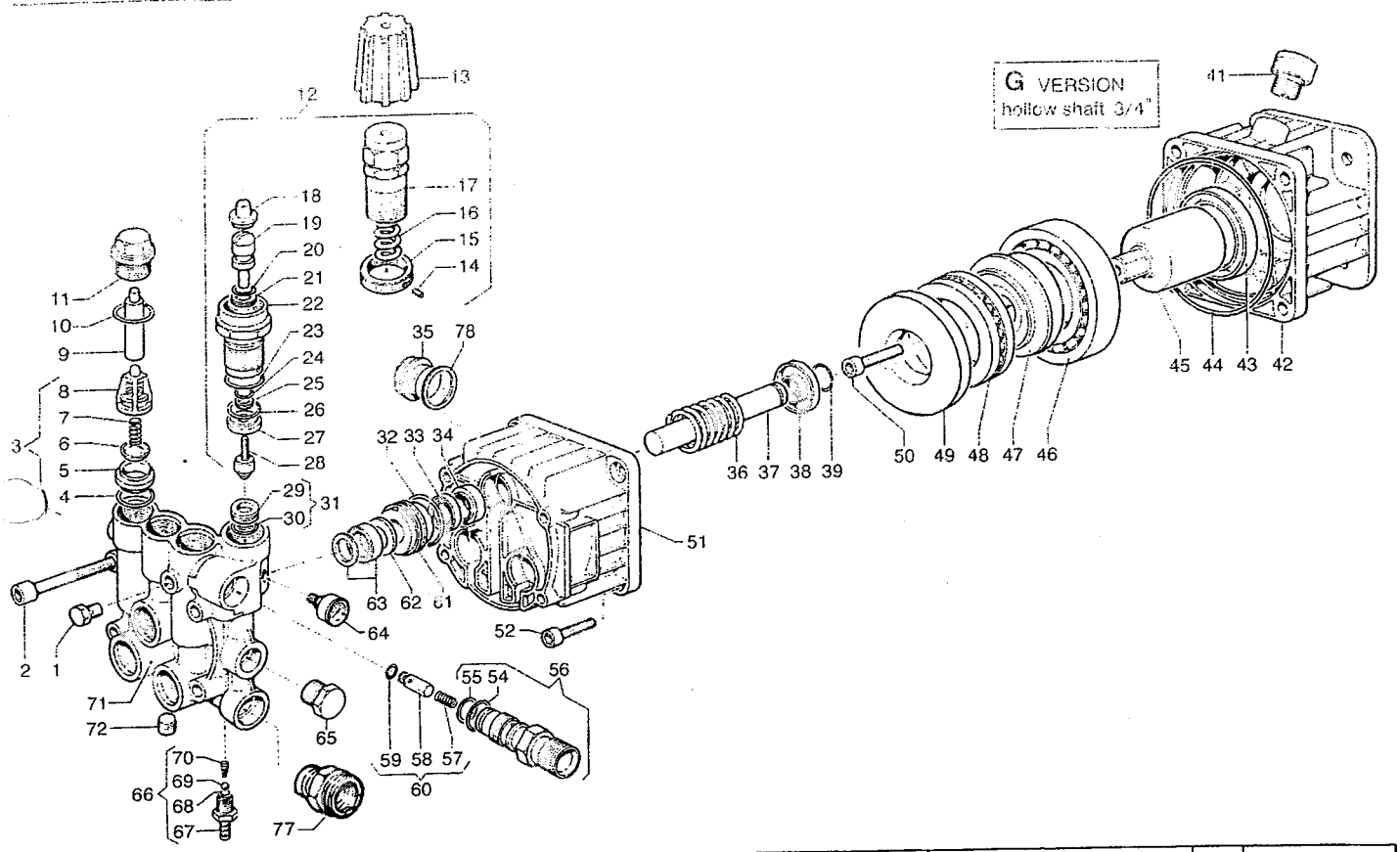

N° Nr.	CODICE PART No.	U.K.	DESCRIZIONE DESCRIPTION	Q.tà Qty.	NOTE NOTES
1	3202.0018.00		CAP 1/8"	1	
2	3609.0156.00		SCREW M8X55	4	
3	1220.0045.00		VALVE KIT	6	
4	1210.0049.00		O-RING 1,78X12.42	6	
5	3009.0129.00		VALVE SEAT	6	
6	3604.0028.00		SUC./DEL. VALVE	6	
7	1802.0192.00		SPRING	6	
8	1205.0033.00		VALVE CAGE	6	
9	0601.0273.00		SPACER	2	
10	1210.0151.00		O-RING 1,78X17,17	6	
11	3202.0236.00		PLUG	6	
12	1215.0271.00		REG. VAL KIT FOR AX 180 BAR	1	
13	1817.0053.00		KNOB	1	
14	3622.0030.00		STOP ADJUSTABLE NUT M4X4	1	
15	1227.0022.00		NUT	1	
16	1802.0182.00		SPRING	1	
17	0204.0046.00		ADJUSTABLE KNOB	1	
18	0009.0207.00		SEAT	1	
19	2409.0077.00		PISTON ROD	1	
20	1210.0406.00		O-RING	1	
21	0009.0206.00		RING	1	
22	0204.0045.00		HOUSING	1	
23	1210.0407.00		O-RING	1	
24	1210.0405.00		O-RING	1	
25	0009.0205.00		RING	1	
26	1210.0404.00		O-RING	1	
27	0009.0204.00		RING	1	
28	3002.0508.00		HOUSING WITH BALL	1	
29	3009.0122.00		SEAT	1	
30	1210.0403.00		O-RING	1	
31	3009.0013.00		VALVE SEAT	1	
32	1210.0356.00		O-RING 1,78X25,12	3	
33	1241.0050.00		PISTON SEAL Ø14	3	
34	0019.0103.00		SEALING RING	3	
35	3201.0019.00		OIL LEVEL PLUG	1	
36	1802.0183.00		SPRING	3	

N° Nr.	CODICE PART No.	U.K.	DESCRIZIONE DESCRIPTION	Q.tà Qty.	NOTE NOTES
37	2409.0089.00		PISTON	3	
38	0009.0221.00		RING	3	
39	0009.0220.00		RING Ø14	3	
41	3200.0071.00		PLUG G3/8	1	
42	3002.0522.00		SUPPORT	1	
43	0019.0034.00		SEALING RING 40X55X7	1	
44	1210.0429.00		O-RING	1	
45	0001.0395.00		ECCENTRIC SHAFT 3/4"	1	
46	0438.0076.00		BALL BEARING 40X80X18 mm	1	
47	0001.0418.00		ECCENTRIC SHAFT 8°30'	1	
48	0436.0016.00		AXIAL BEARING	1	
49	2816.0025.00		THRUST BEARING	1	
50	3609.0005.00		SCREW M8X20	1	
51	0403.0135.00		PUMP CRANKCASE	1	
52	3609.0005.00		SCREW M8X20	4	
54	1210.0040.00		O-RING 1,78X15,6	1	
55	1210.0049.00		O-RING 1,78X12,42	1	
56	3410.0311.00		INJECTOR BODY KIT Ø18	1	
57	1802.0197.00		SPRING	1	
58	2409.0086.00		CHECK VALVE	1	
59	1210.0397.00		O-RING	1	
60	2409.0091.00		CHECK VALVE KIT	1	
61	0009.0219.00		RING	3	
62	0009.0230.00		RING	3	
63	1241.0055.00		PISTON SEAL 150 BAR	3	
64	1816.0104.00		GAUGE	1	
65	3200.0007.00		PLUG 3/8 GAS OT56	1	
66	2803.0435.00		INJECTOR KIT	1	
67	2803.0425.00		HOSE BARB FITTING	1	
68	2812.0067.00		O-RING	1	
69	3003.0026.00		BALL	1	
70	1802.0180.00		SPRING	1	
71	3218.0299.00		PUMP VALVE CHAMBER	1	
72	3200.0017.00		PLUG 1/8X8	1	
77	2000.0056.00		NIPPLE	1	
78	1210.0302.00		O-RING 2,62X20,7	1	