Husqvarna
353 (2007-02)

Rozkres je dokumentace výrobce (© příslušný výrobce) a slouží k identifikaci dílů. Pro výběr dílu se vždy řiďte katalogovým číslem.

A

compl 537 15 28-01

compl 537 10 78-01

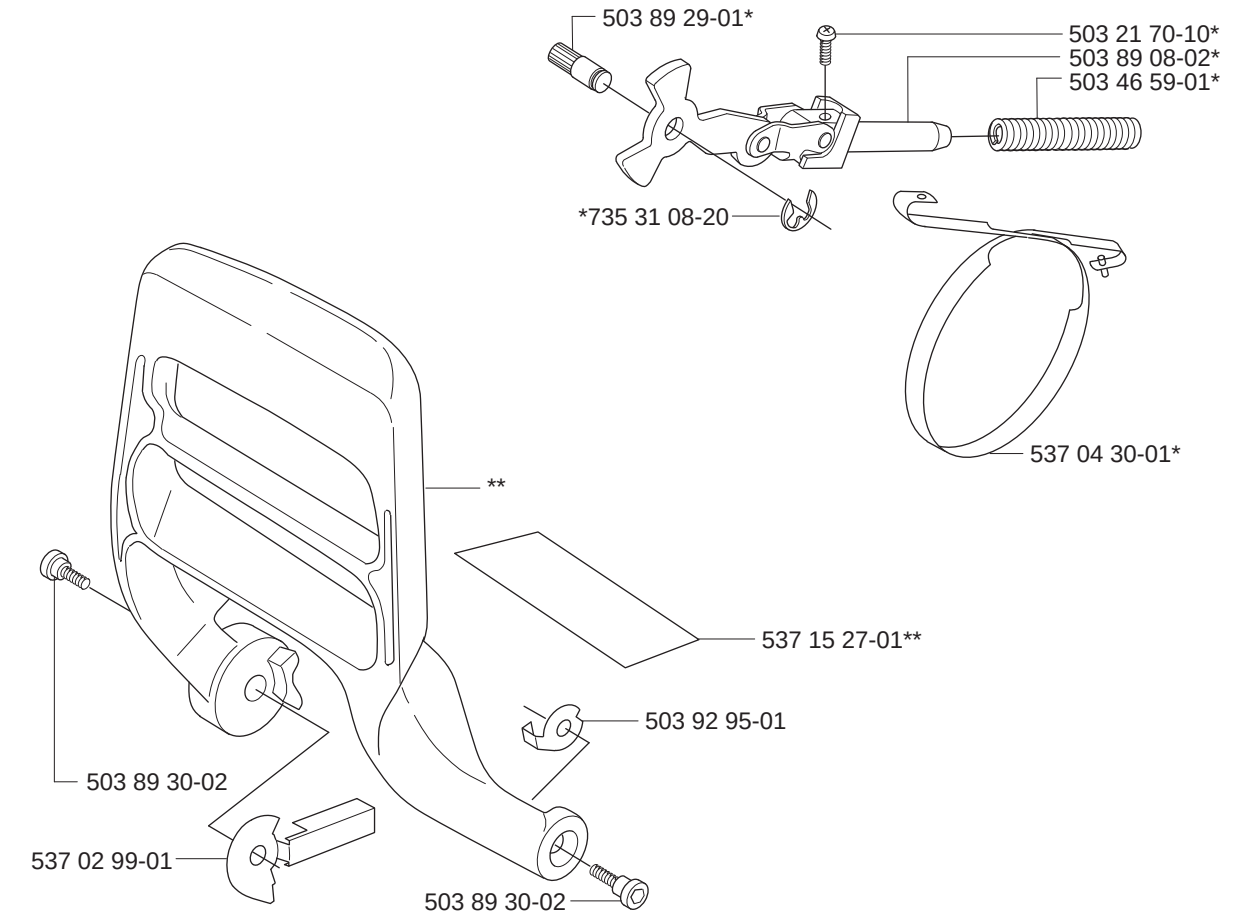

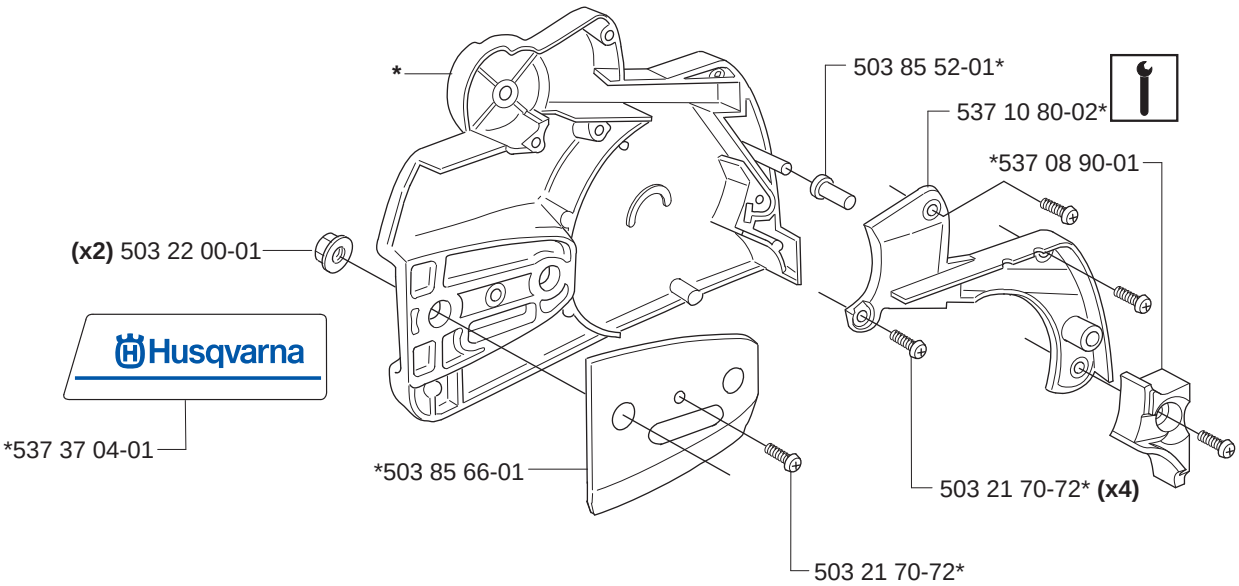

B

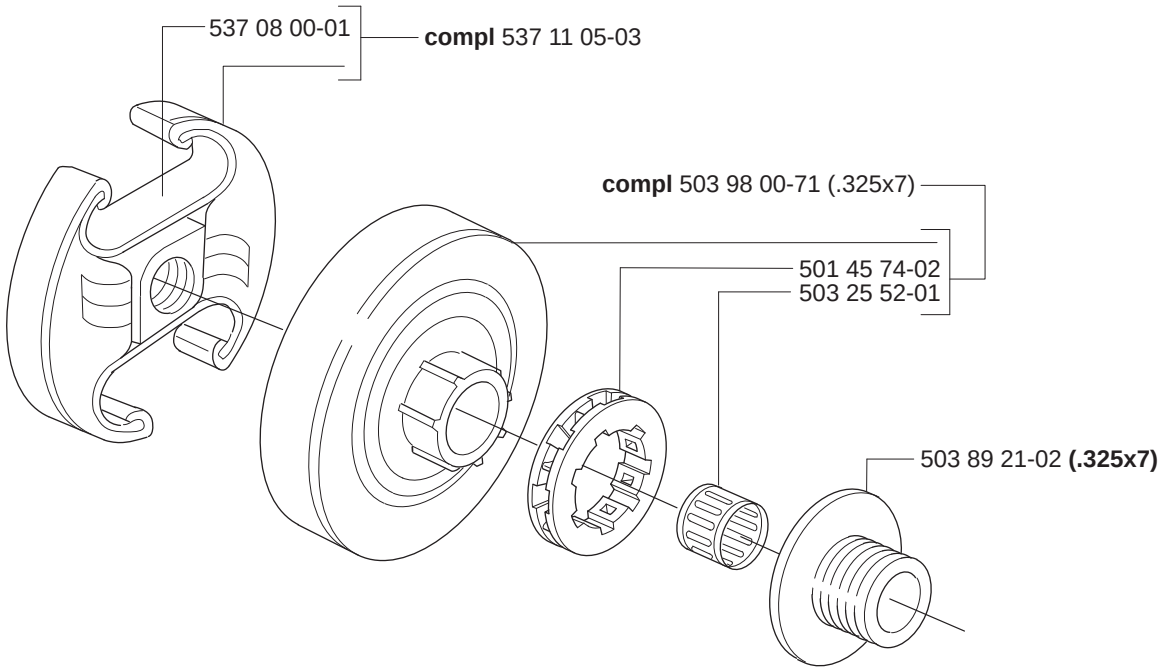

***compl** 544 18 01-01

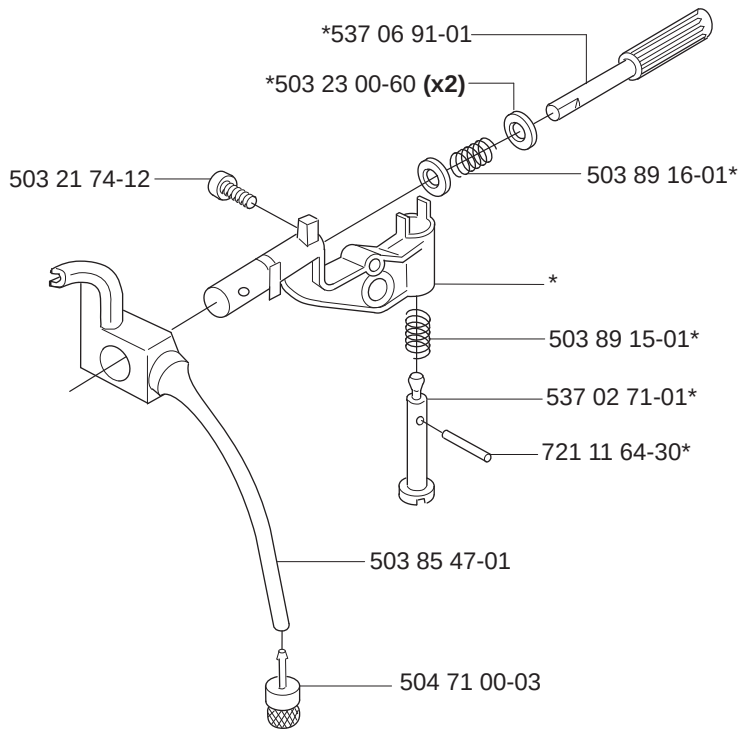

C ***compl** 503 90 90-02

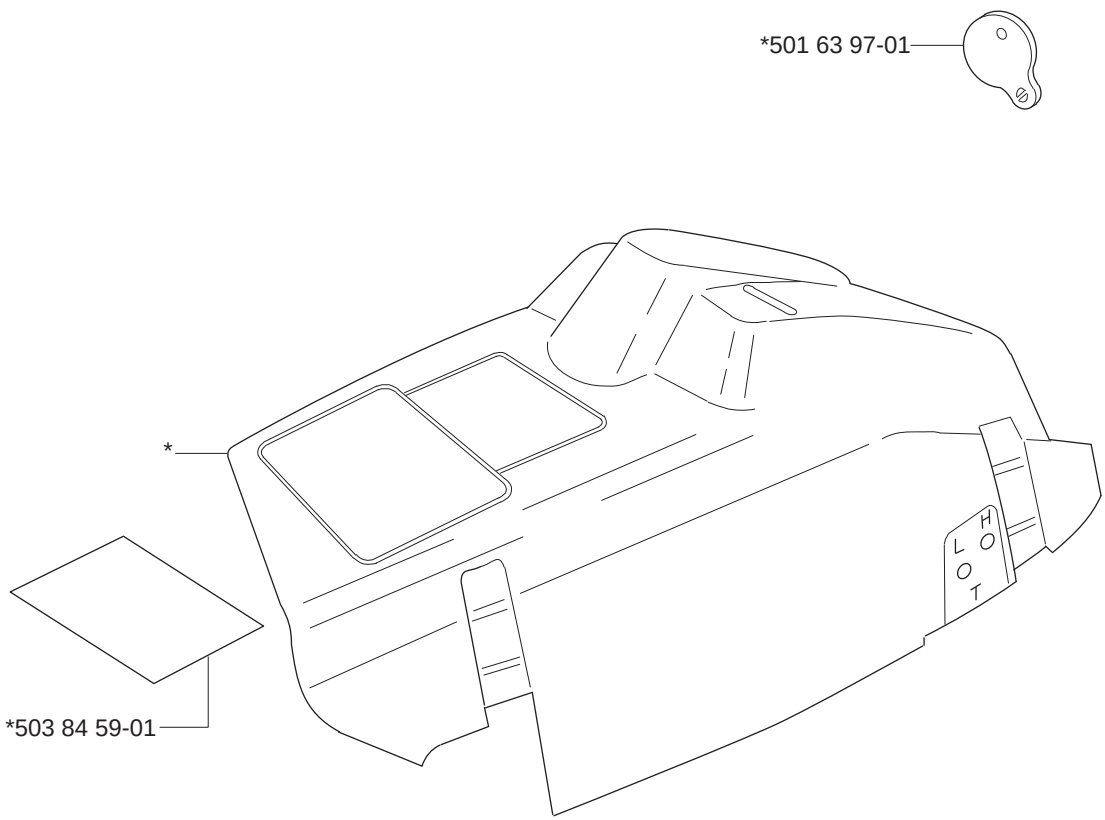

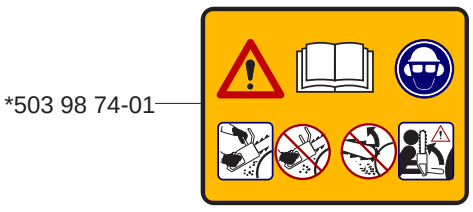

D ***compl** 537 25 31-02 **(353)**
****compl** 503 86 98-71 **(346XP)**

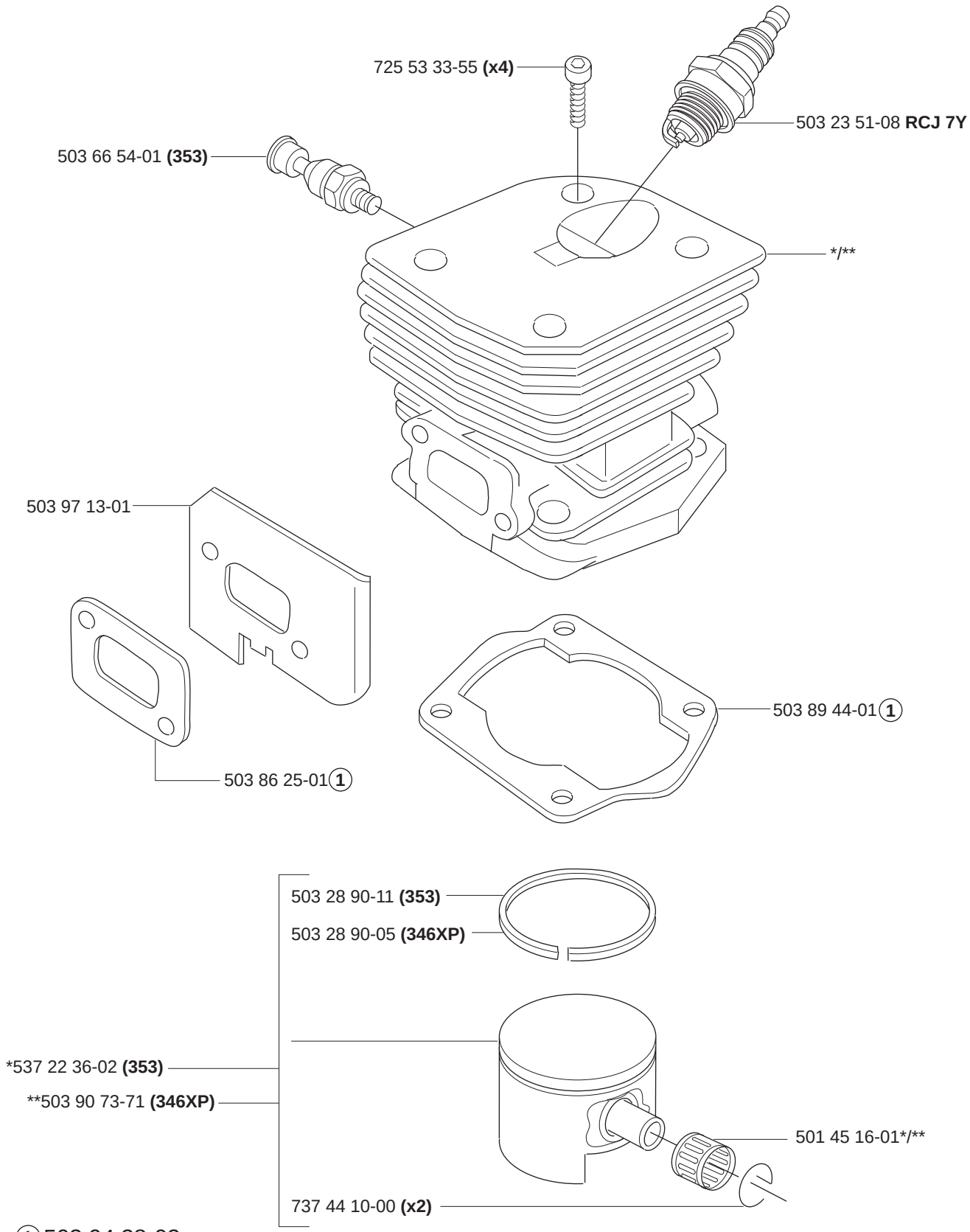

1 503 94 28-02
Set of gaskets
Dichtungssatz
Jeu de joints
Juego de juntas
Packningssats

E ***compl** 503 85 76-71

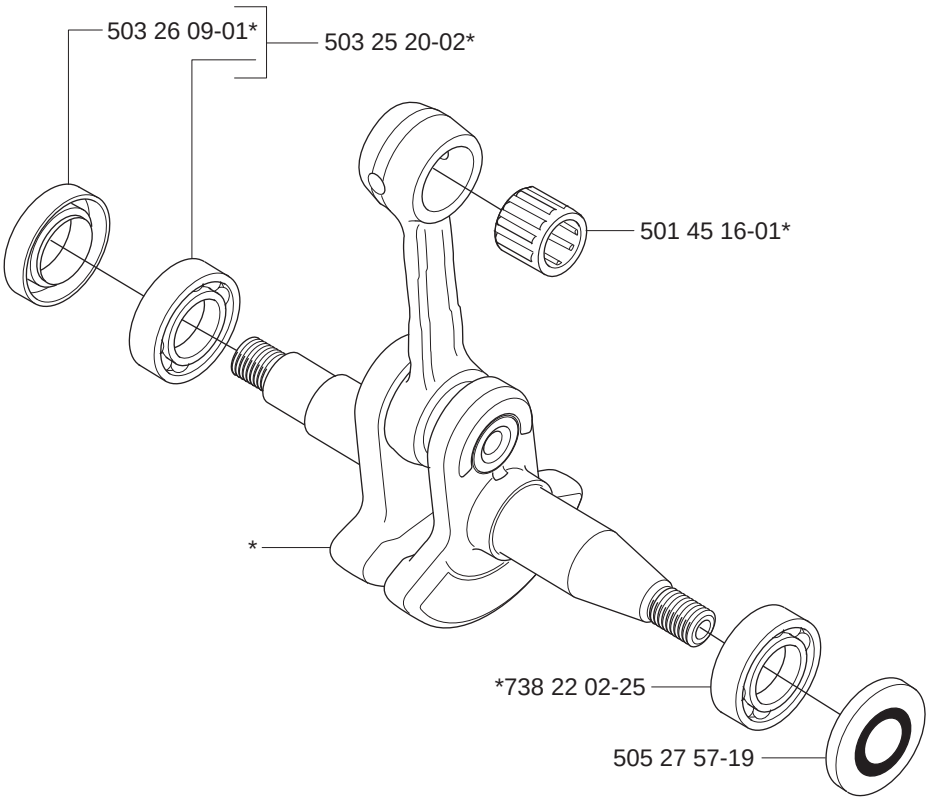

F

***compl** 503 86 27-03 **(EU)**

****compl** 503 86 28-03 **(DF)**
****compl** 537 07 54-02 **(E-tech)**

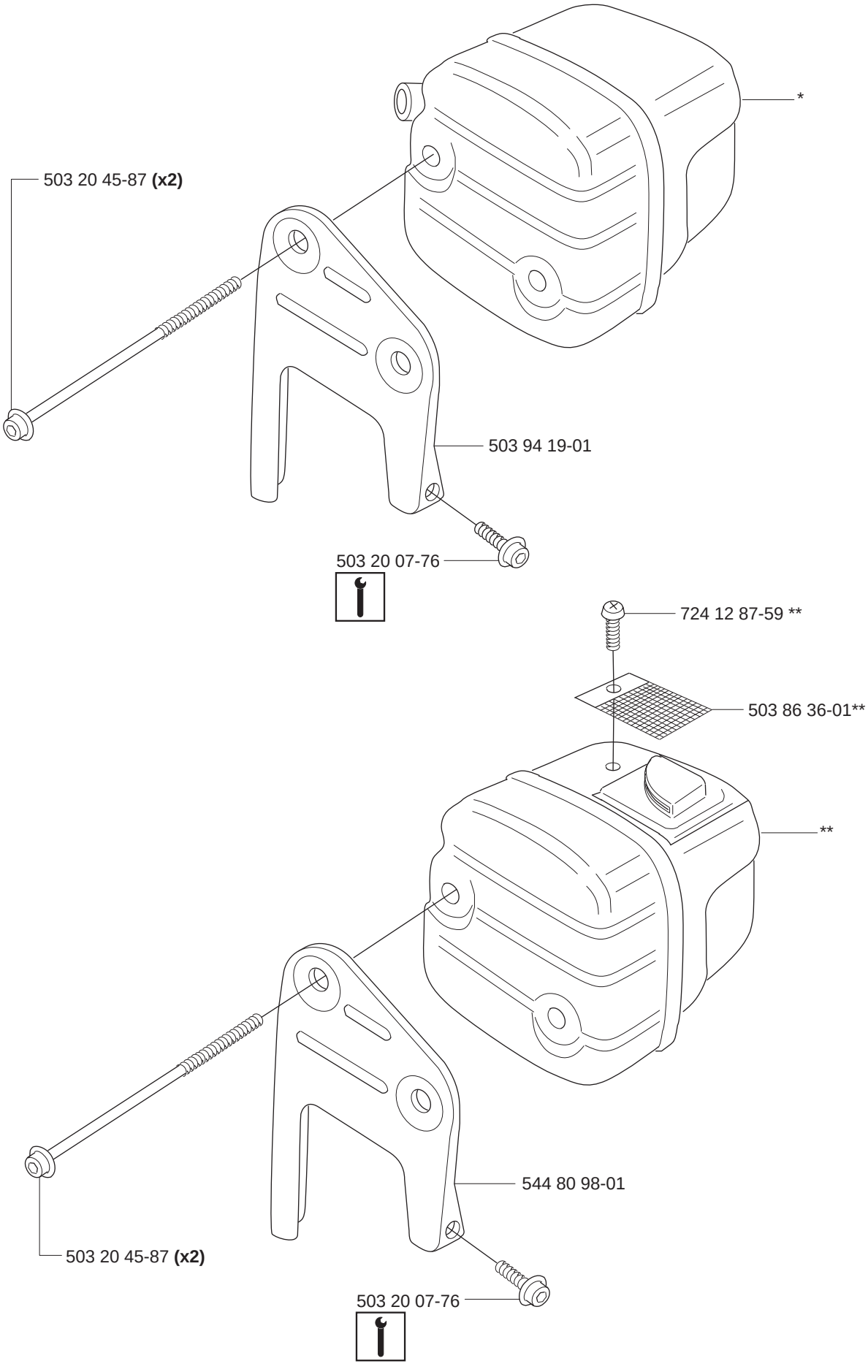

G

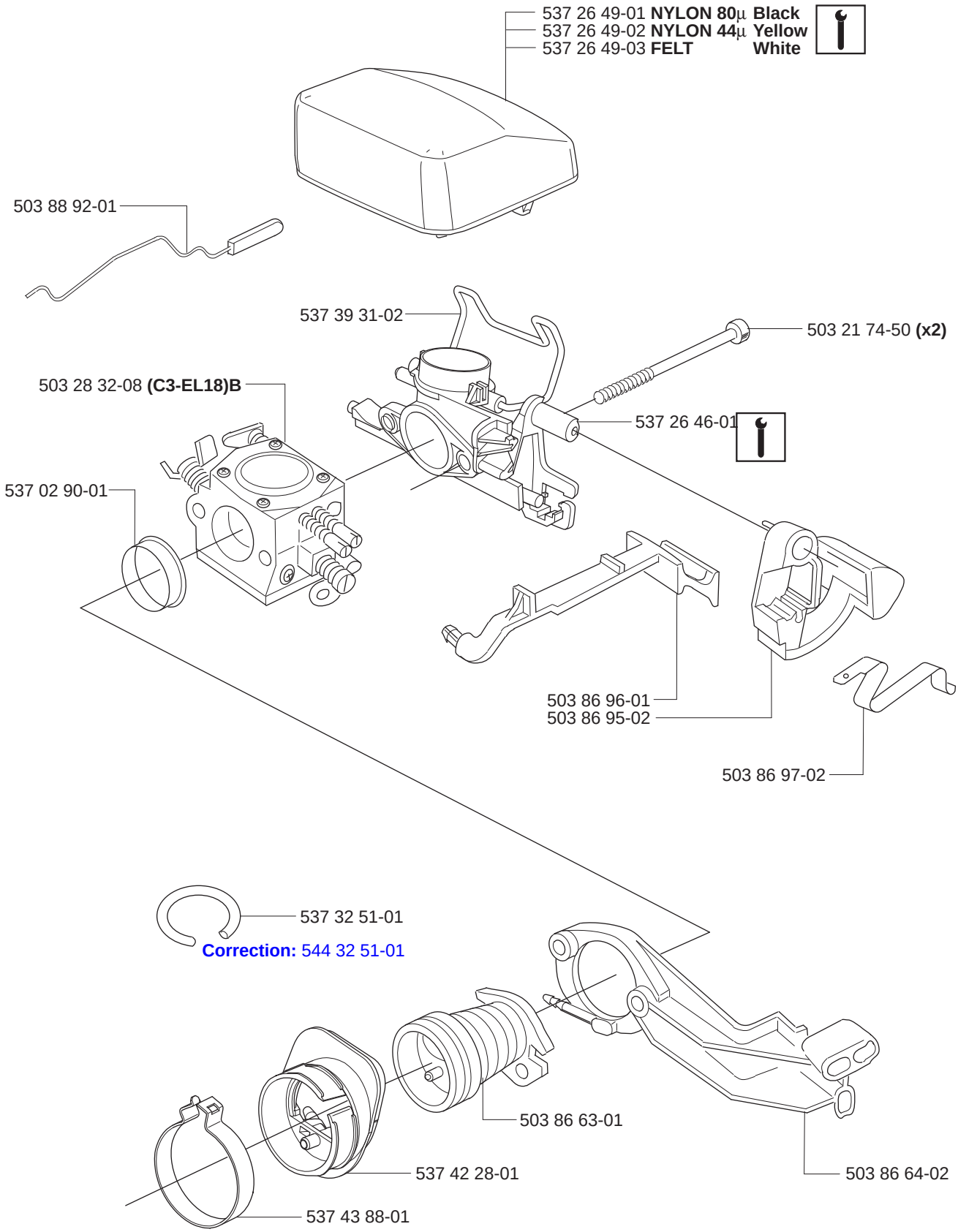
537 26 49-01 NYLON 80µ Black
537 26 49-02 NYLON 44µ Yellow
537 26 49-03 FELT White
503 88 92-01
537 39 31-02
503 21 74-50 (x2)
503 28 32-08 (C3-EL18)B
537 26 46-01
537 02 90-01
503 86 96-01
503 86 95-02
503 86 97-02
537 32 51-01
Correction: 544 32 51-01
503 86 63-01
537 42 28-01
503 86 64-02
537 43 88-01

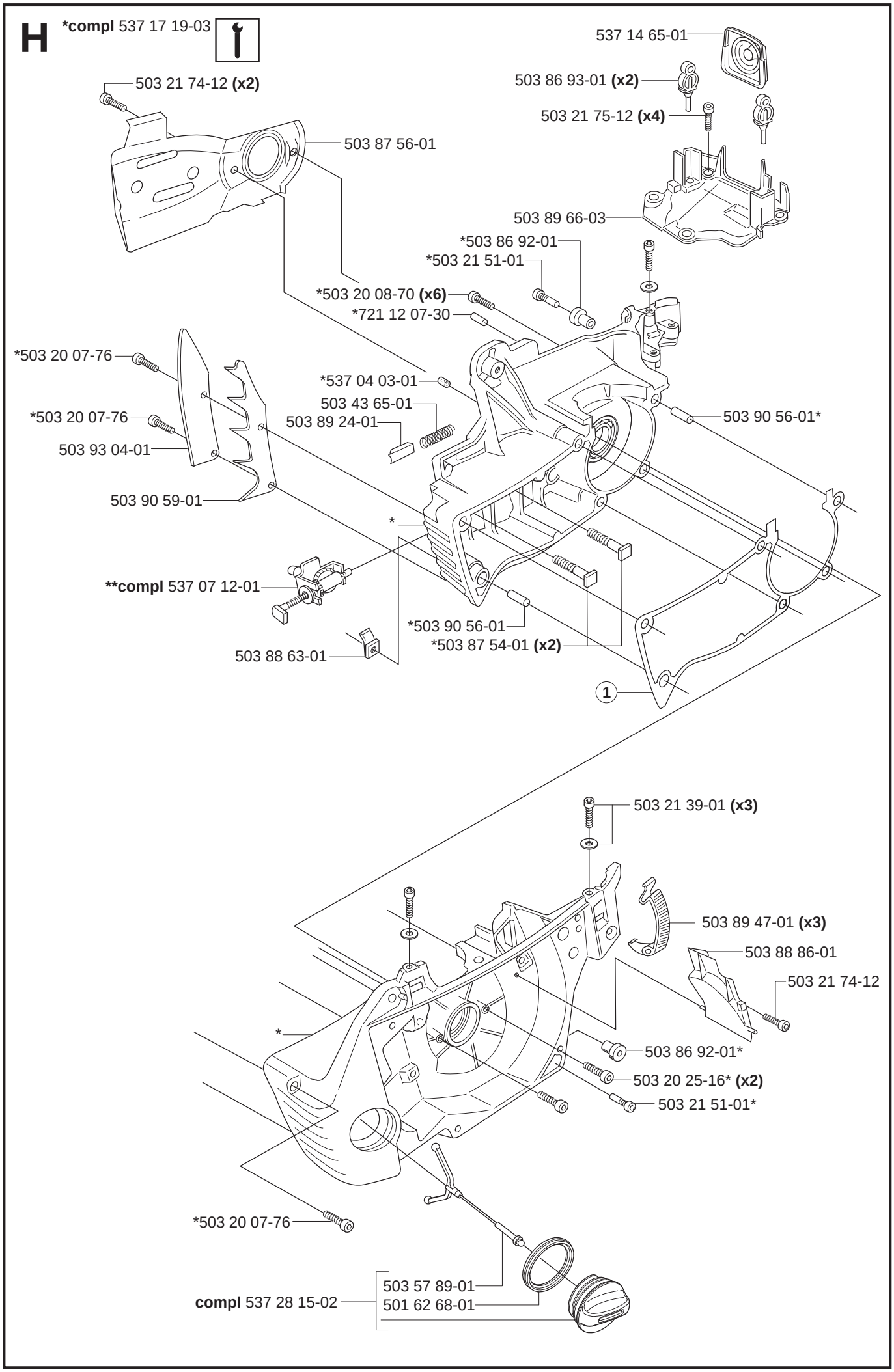
H
*compl 537 17 19-03
537 14 65-01
503 86 93-01 (x2)
503 21 74-12 (x2)
503 21 75-12 (x4)
503 87 56-01
503 89 66-03
*503 86 92-01
*503 21 51-01
*503 20 08-70 (x6)
*721 12 07-30
*503 20 07-76
*537 04 03-01
503 43 65-01
503 89 24-01
*503 20 07-76
503 90 56-01*
503 93 04-01
503 90 59-01
*
**compl 537 07 12-01
*503 90 56-01
*503 87 54-01 (x2)
503 88 63-01
1
503 21 39-01 (x3)
503 89 47-01 (x3)
503 88 86-01
503 21 74-12
*
503 86 92-01*
503 20 25-16* (x2)
503 21 51-01*
*503 20 07-76
503 57 89-01
compl 537 28 15-02
501 62 68-01

J ***compl** 503 86 37-03

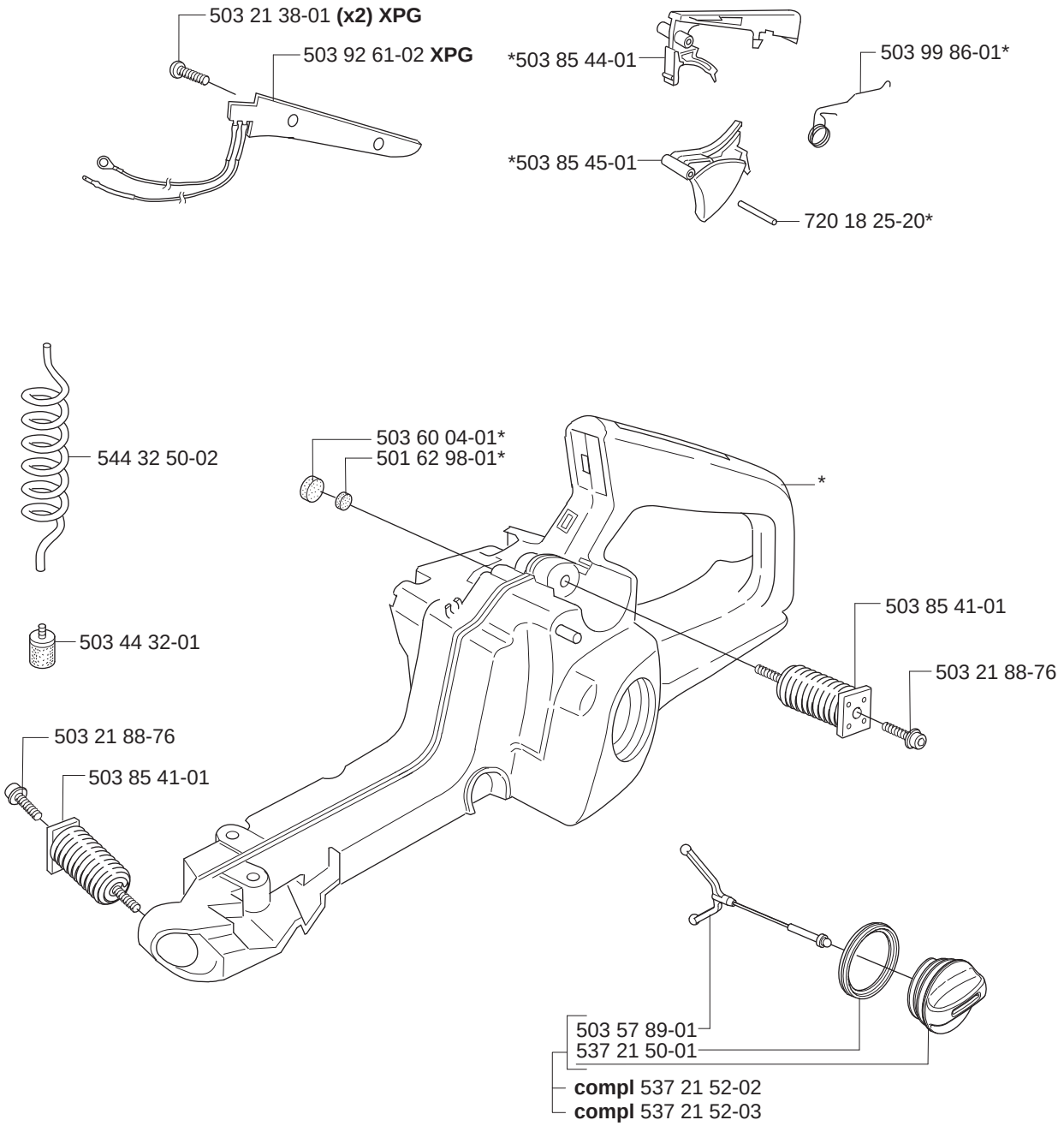

K ***compl** 537 30 17-01 ****compl** 537 30 17-02 **XPG**

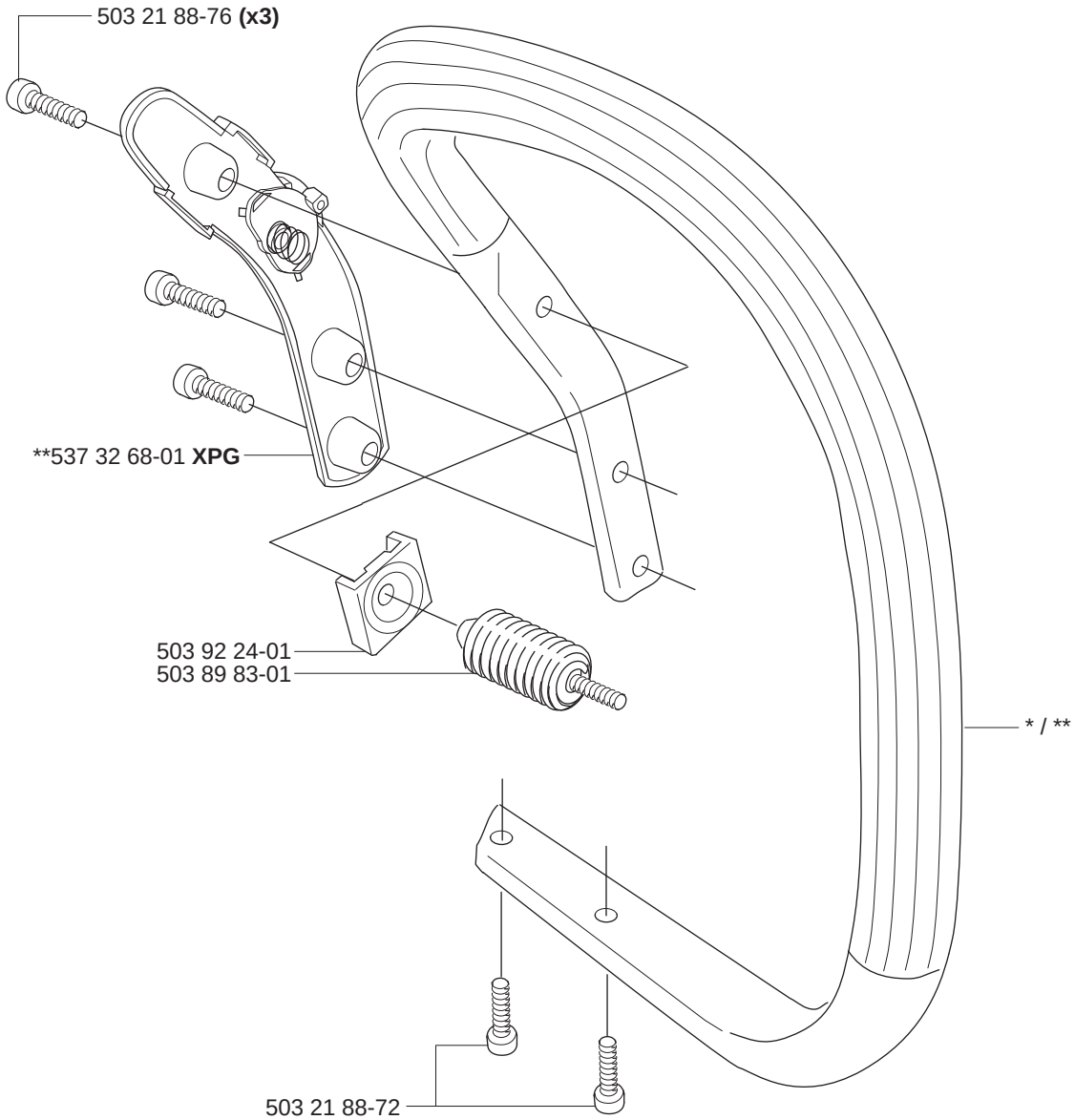

L

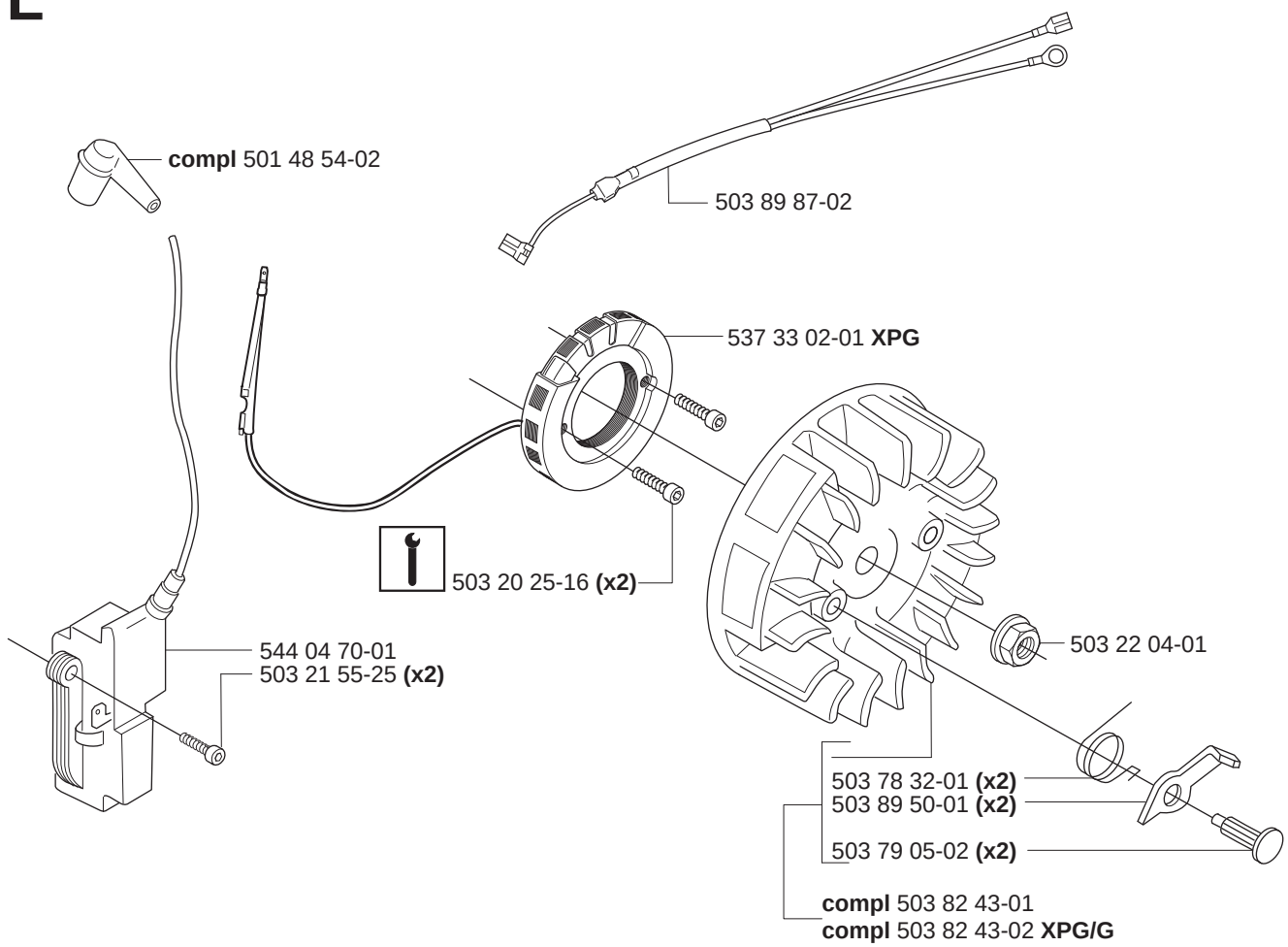

Heated carburettor
Heated handles

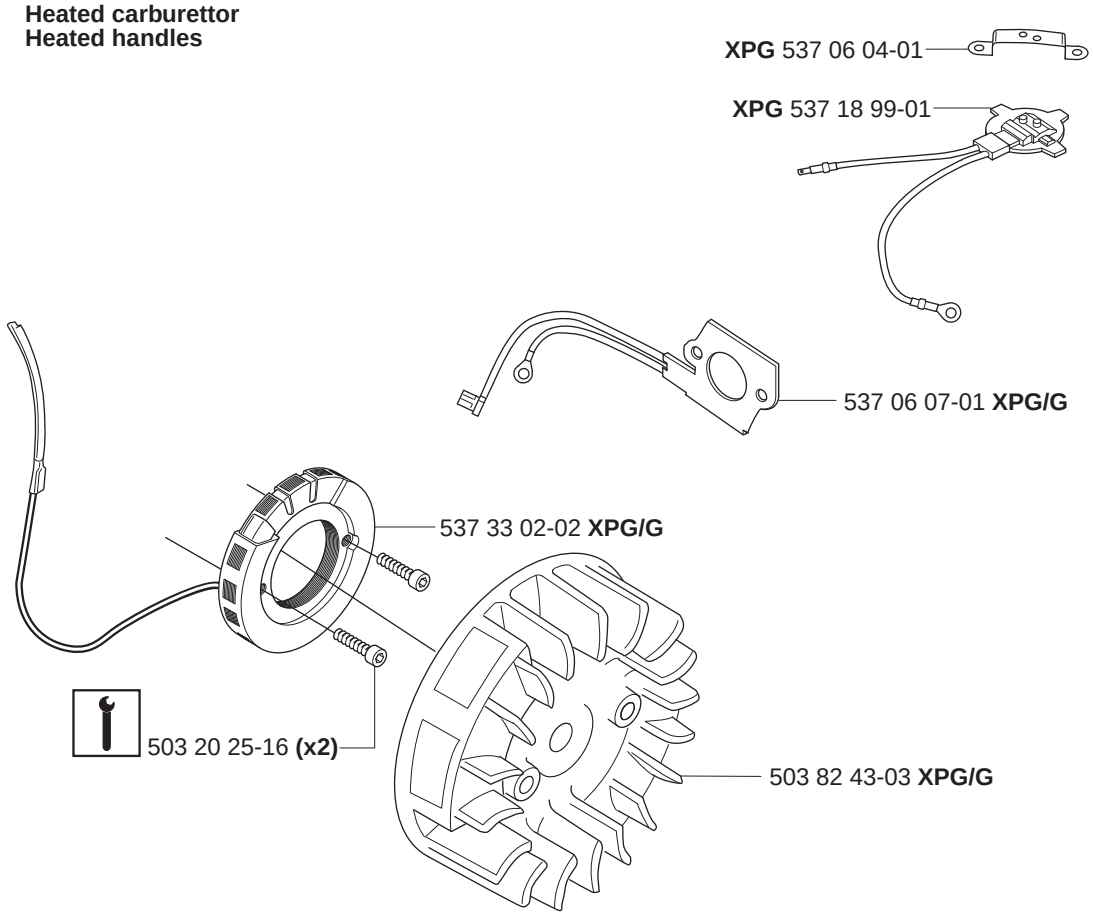

M ***compl** 537 10 47-02

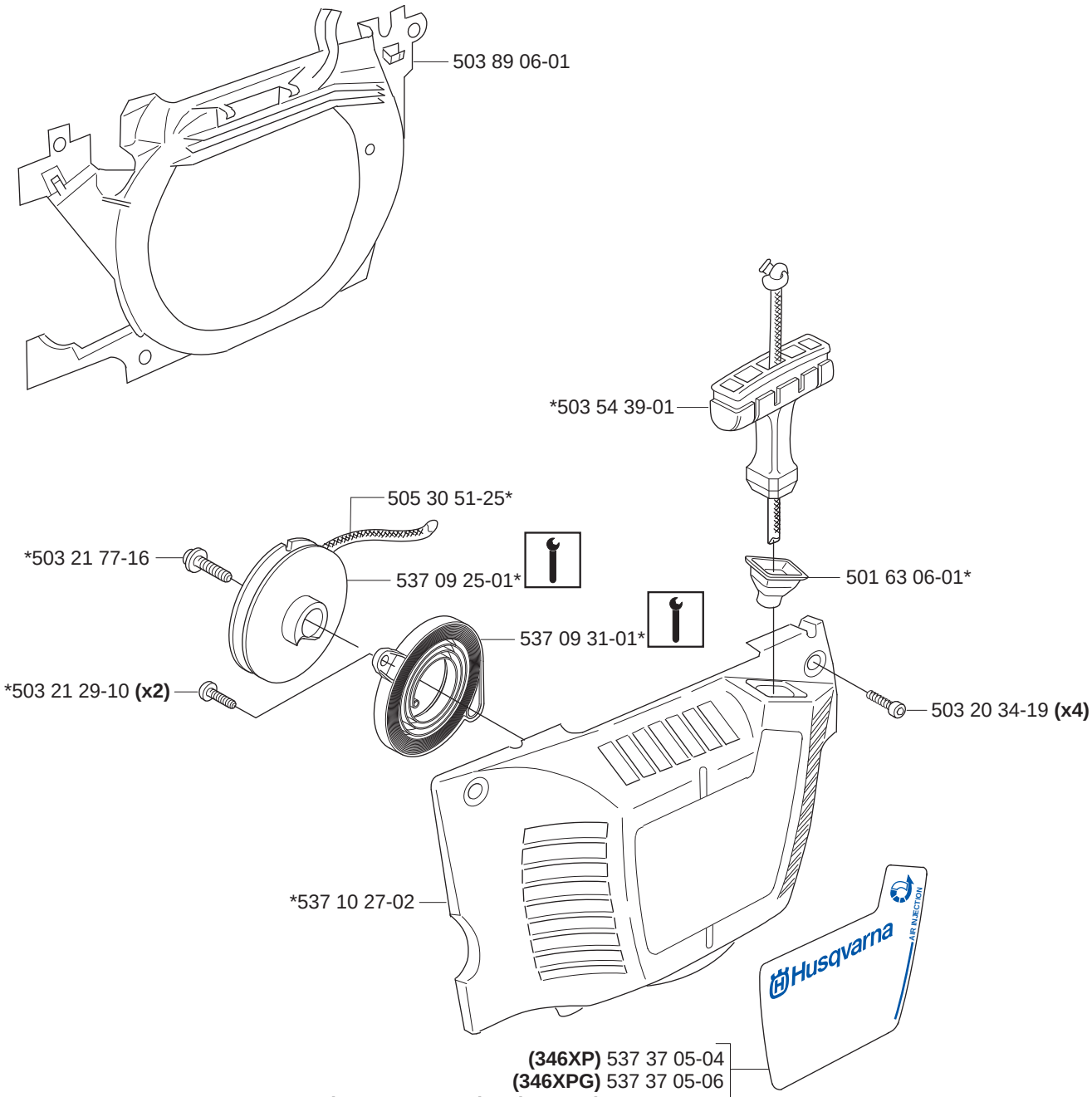

(346XP) 537 37 05-04
(346XPG) 537 37 05-06
(346XPG Heated carburettor) 537 37 05-07
(346XP E-tech) 537 37 05-05
(346XPG E-tech) 537 37 05-08
(346XPG Heated carburettor E-tech) 537 37 05-09

(353) 537 37 05-10
(353G) 537 37 05-12
(353G Heated carburettor) 537 37 05-13
(353 E-tech) 537 37 05-11
(353G E-tech) 537 37 05-14
(353G Heated carburettor E-tech) 537 37 05-15

N

***compl** 503 28 32-08 **ZAMA C3-EL18B**

ZAMA C3-EL18B

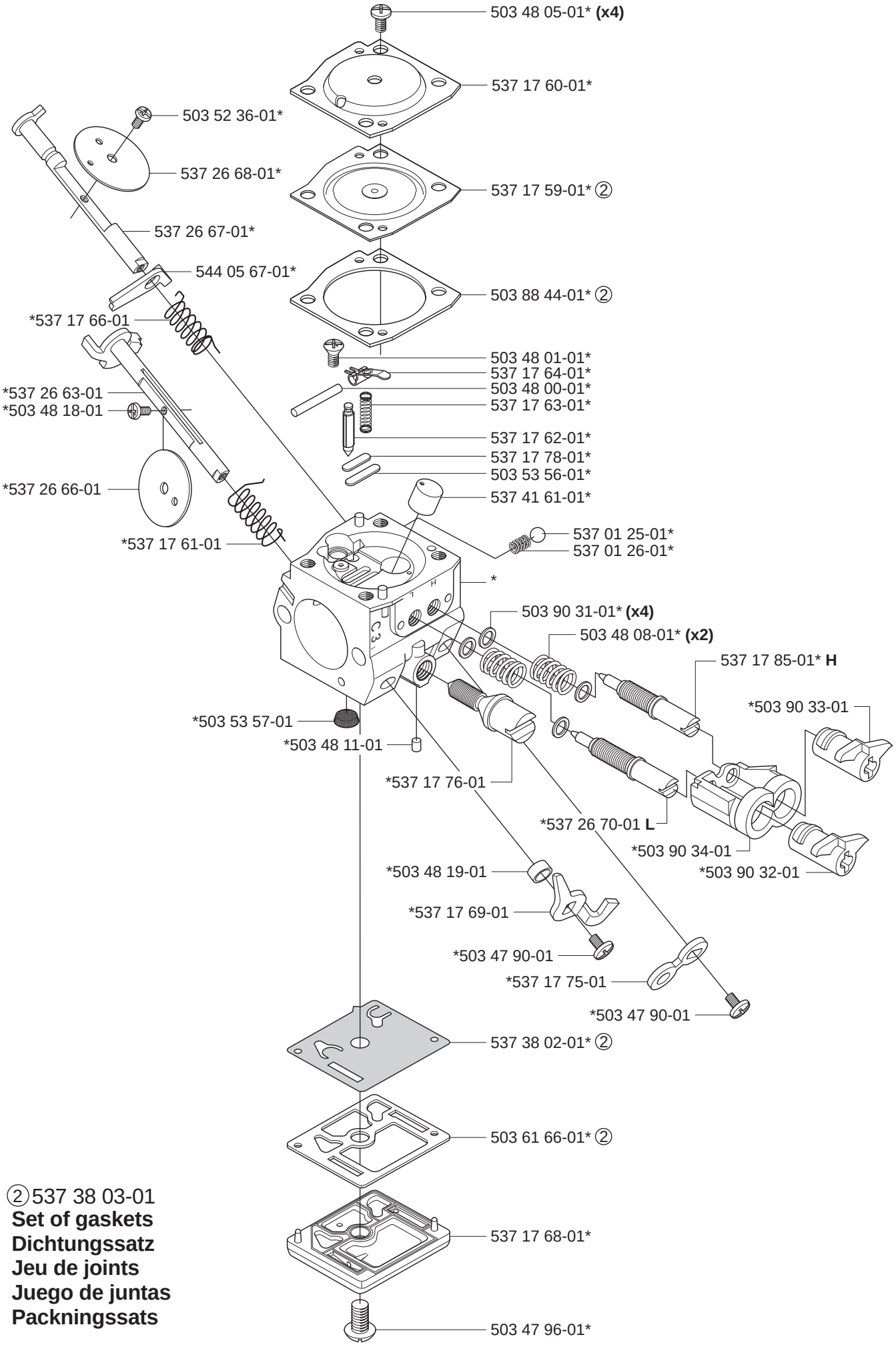

②537 38 03-01
Set of gaskets
Dichtungssatz
Jeu de joints
Juego de juntas
Packningssats

P

Tillbehör
Accessories
Zubehöre
Accessoires
Accesorios
***compl** 503 55 85-04

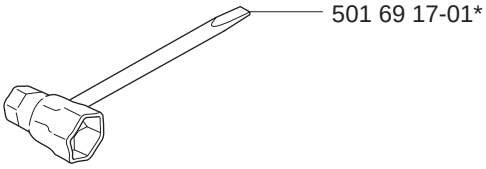

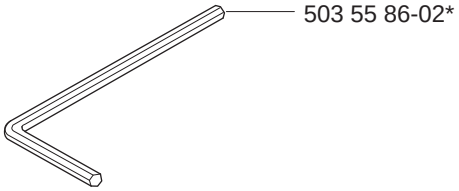

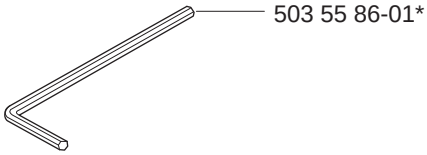

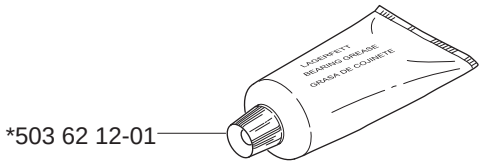

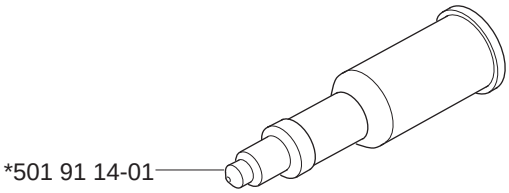

WINTER KIT
***compl** 537 04 28-02

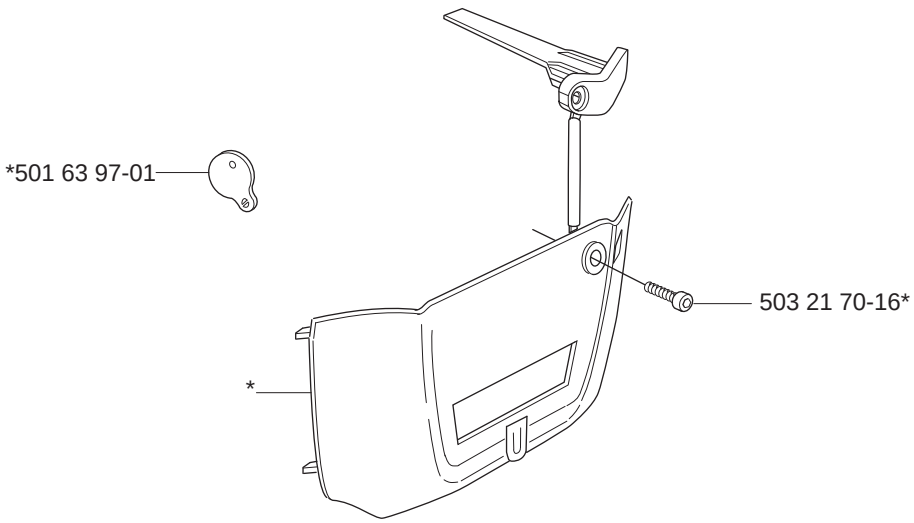

Q

Up to 004100041 (346XP)

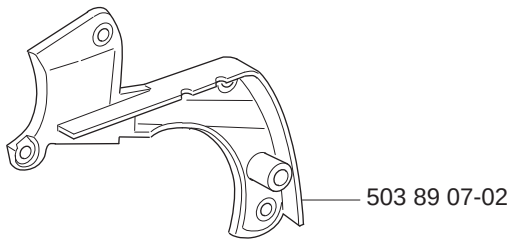

Up to 010700001 (346XP)

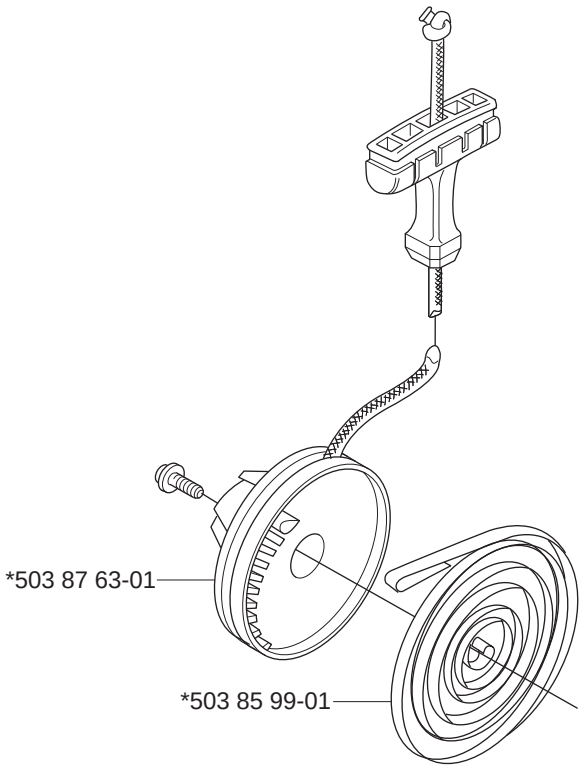

Q

Up to 030500001 (346XP)

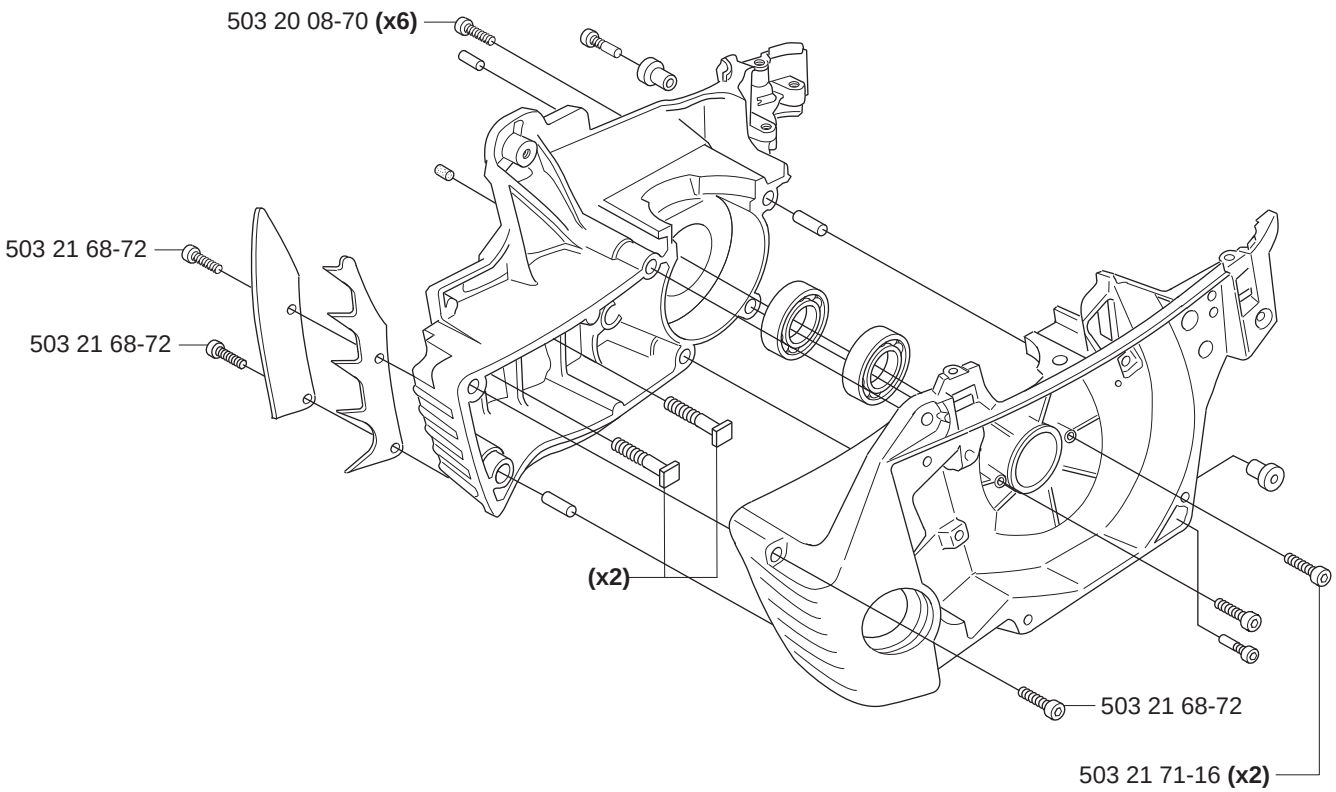

Up to 034200001 (346XP)
Up to 034200001 (353)

