Husqvarna
350 (2005-05)

Rozkres je dokumentace výrobce (© příslušný výrobce) a slouží k identifikaci dílů. Pro výběr dílu se vždy řiďte katalogovým číslem.

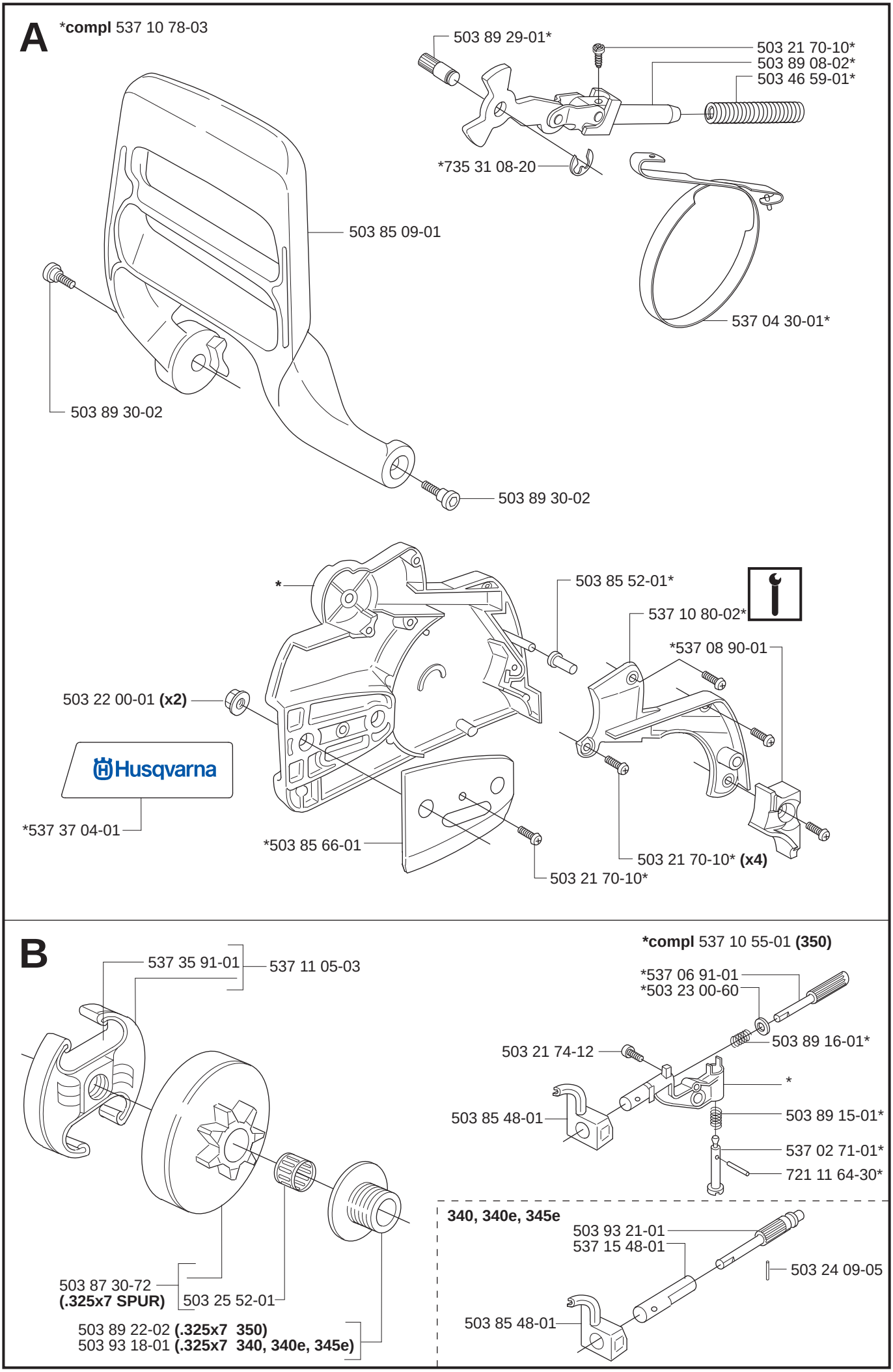
A
*compl 537 10 78-03
503 89 29-01*
503 21 70-10*
503 89 08-02*
503 46 59-01*
*735 31 08-20
503 85 09-01
537 04 30-01*
503 89 30-02
503 89 30-02
*
503 85 52-01*
537 10 80-02*
*537 08 90-01
503 22 00-01 (x2)
Husqvarna
*537 37 04-01
*503 85 66-01
503 21 70-10* (x4)
503 21 70-10*
B
537 35 91-01
537 11 05-03
503 87 30-72
(.325x7 SPUR)
503 25 52-01
503 89 22-02 (.325x7 350)
503 93 18-01 (.325x7 340, 340e, 345e)
*compl 537 10 55-01 (350)
*537 06 91-01
*503 23 00-60
503 89 16-01*
503 21 74-12
*
503 85 48-01
503 89 15-01*
537 02 71-01*
721 11 64-30*
340, 340e, 345e
503 93 21-01
537 15 48-01
503 24 09-05
503 85 48-01

C ***compl** 503 91 05-01 **(340)**

*503 98 74-01



*503 20 34-25 **(x3)**

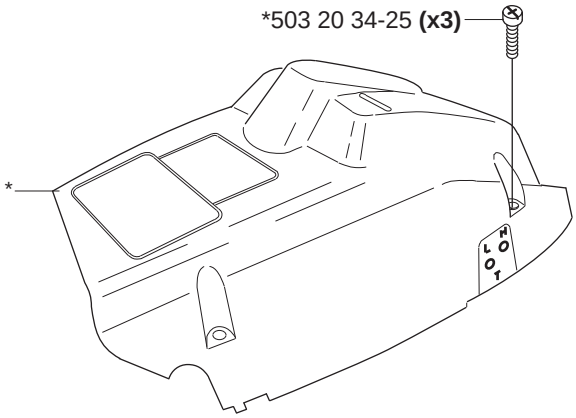

C ***compl 537 42 20-01 (340e, 345e)**

*503 98 74-01



*503 20 34-25 **(x3)**

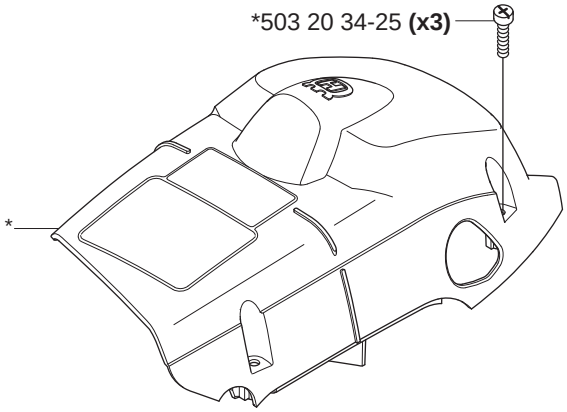

C ***compl** 537 42 19-01 **(350)**

*503 98 74-01



*503 20 34-25 **(x3)**

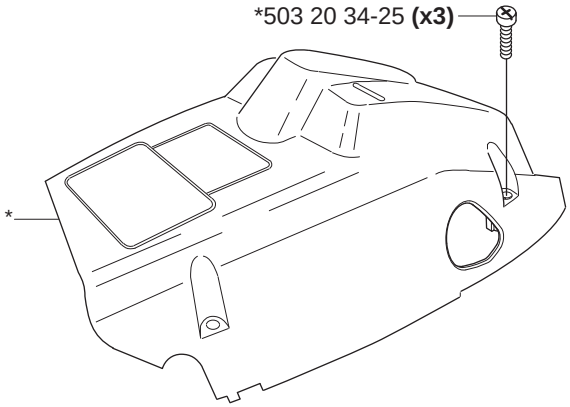

D

compl 501 48 54-02



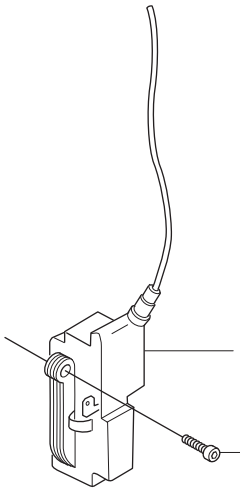

537 16 21-04

503 21 55-25 **(x2)**

503 89 87-03

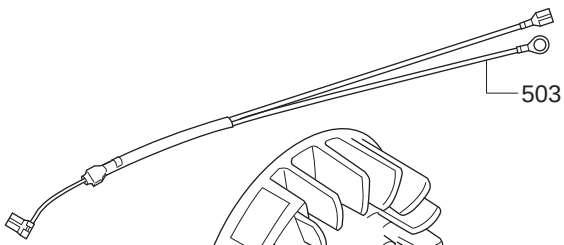

503 22 04-01

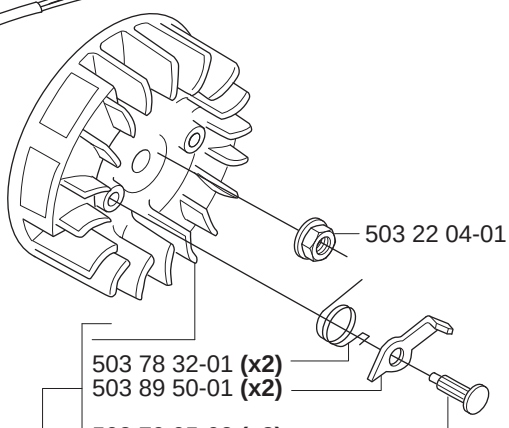

503 78 32-01 **(x2)**
503 89 50-01 **(x2)**

503 79 05-02 **(x2)**

compl 503 82 43-01

E

***compl** 503 86 27-03 **(EU) 350**

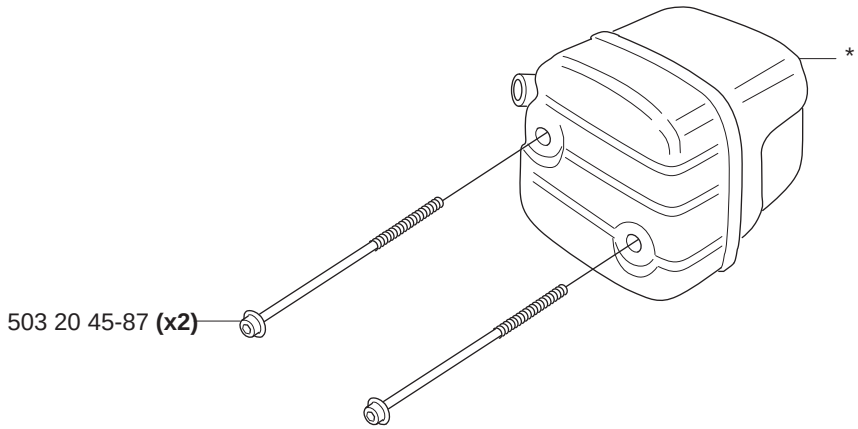

E

***compl** 503 87 96-02 **(FG) 340, 340e, 345**

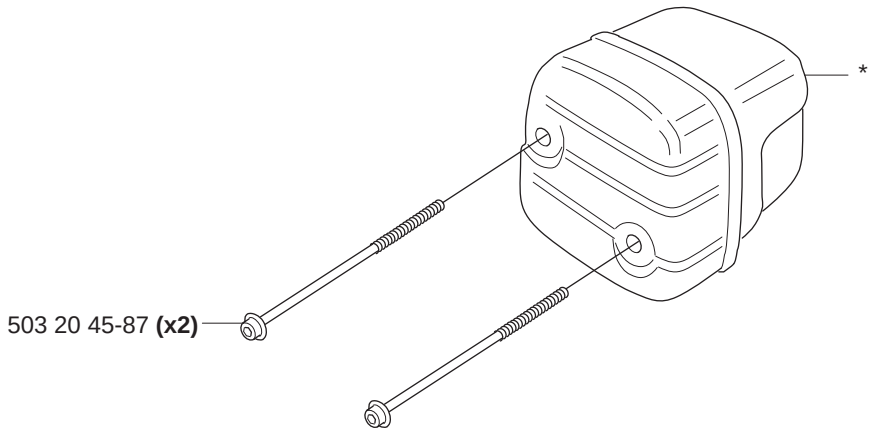

E

***compl** 503 86 28-03 **(DF) 340, 340e, 345, 350**

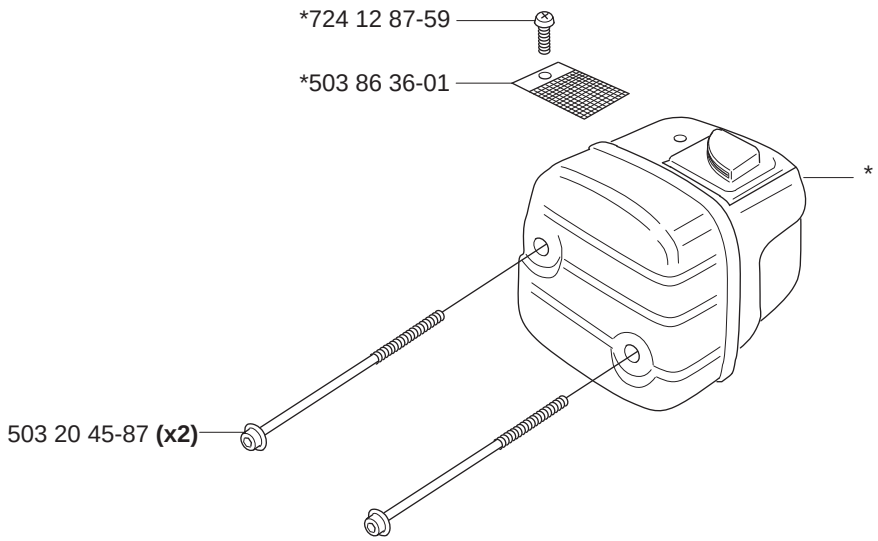

F **340**

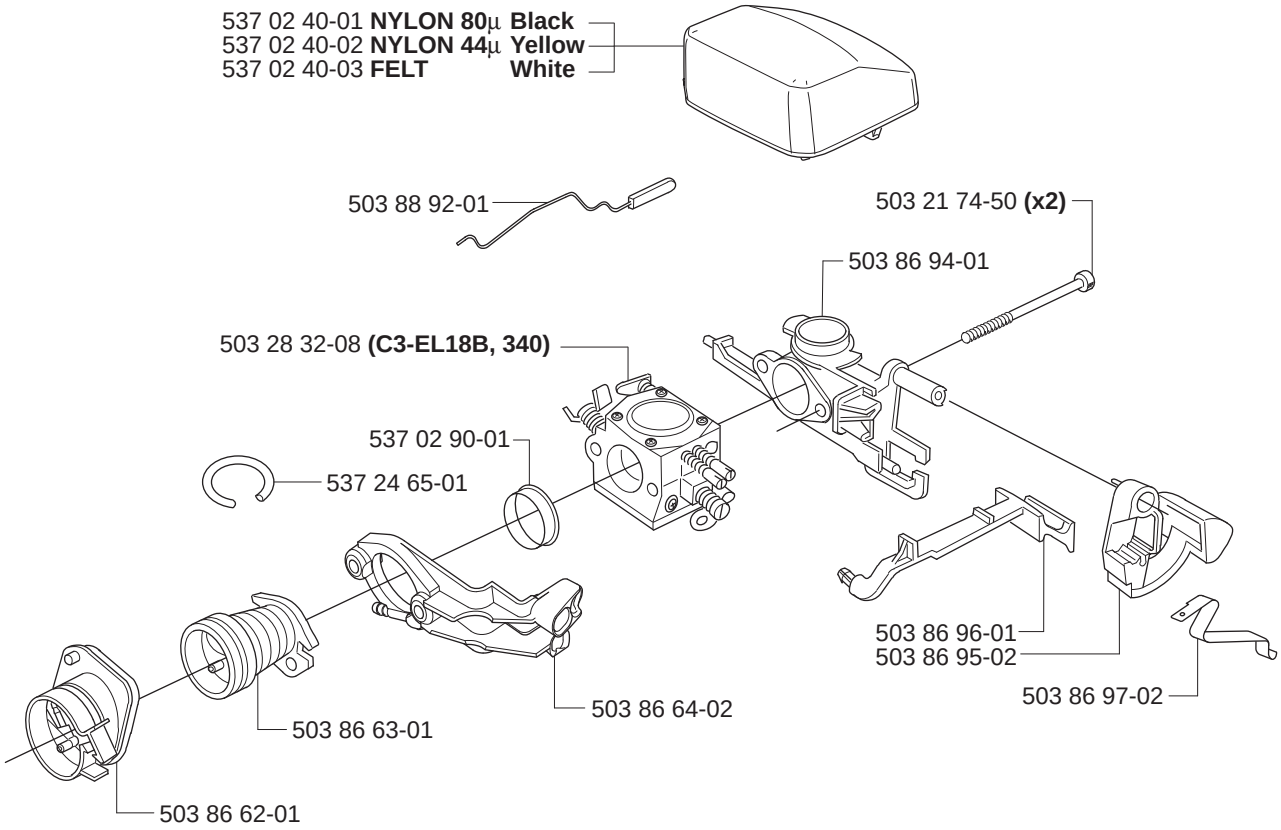

F **340e, 345e, 350**

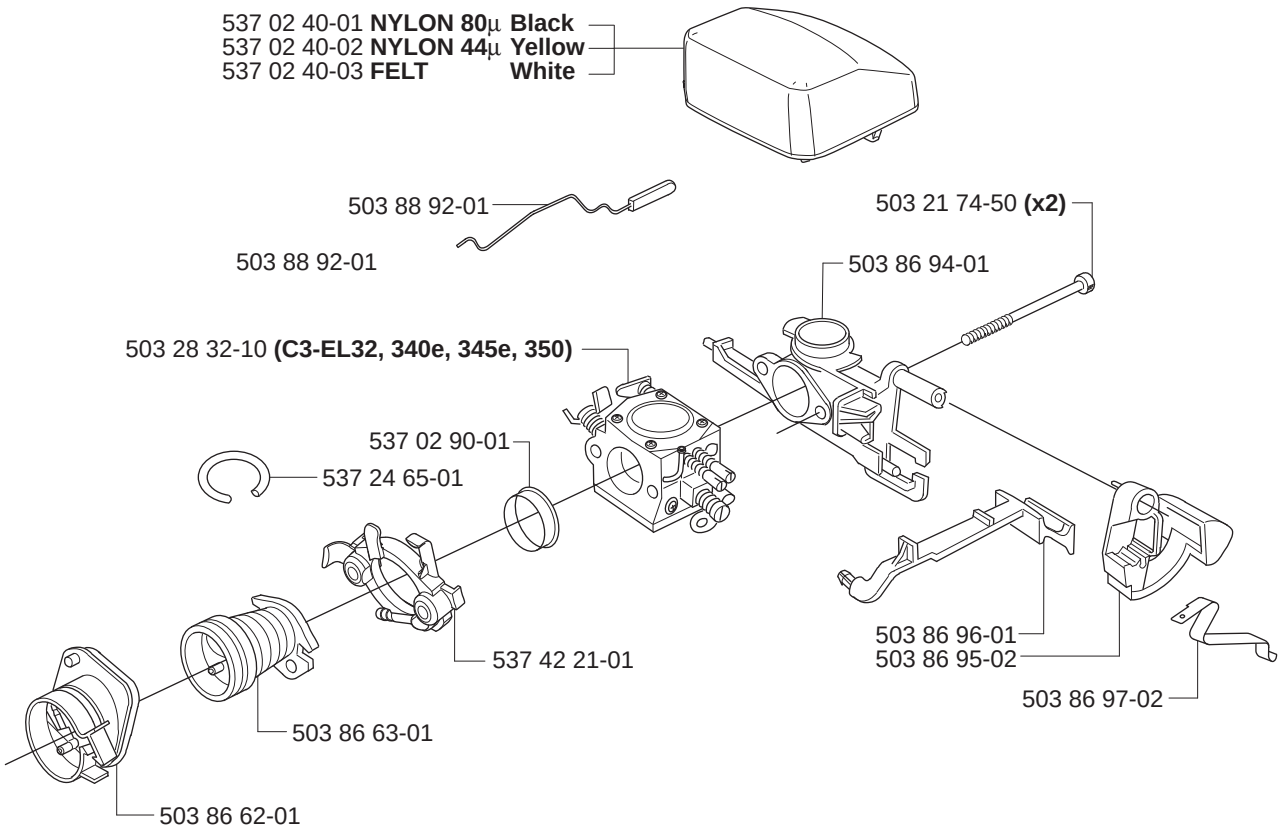

G

***compl** 503 87 00-76 **(340, 340e)**
***compl** 503 87 02-76 **(345e)**

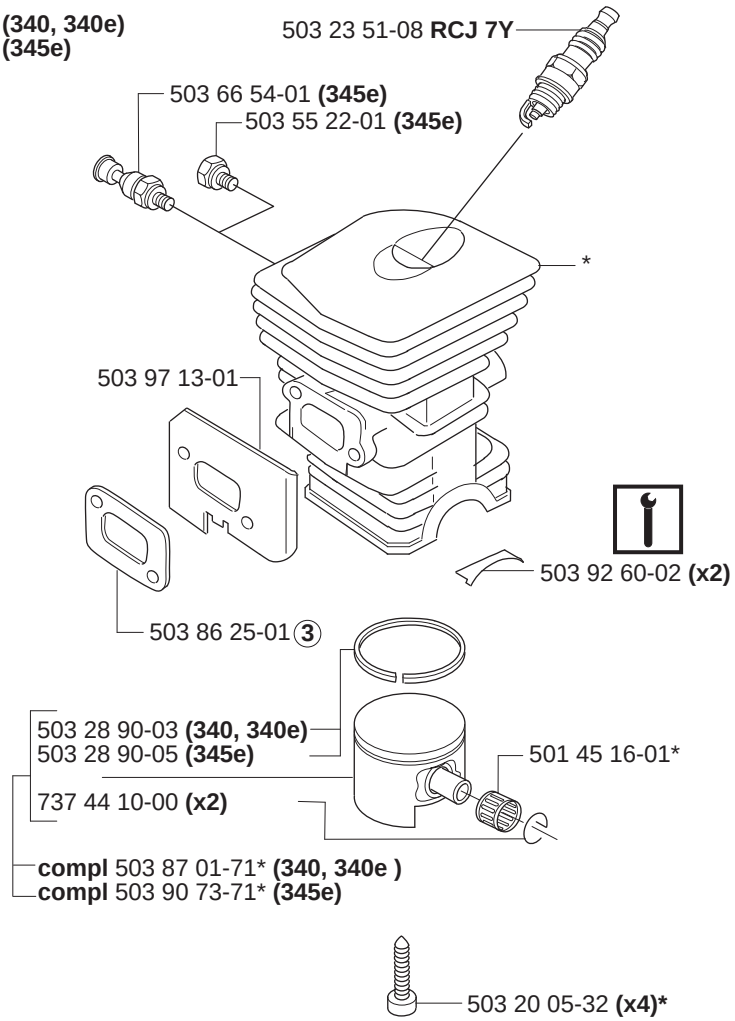

G

****compl** 537 25 30-02 **(350EPA)**
***compl** 503 86 99-71 **(350)**

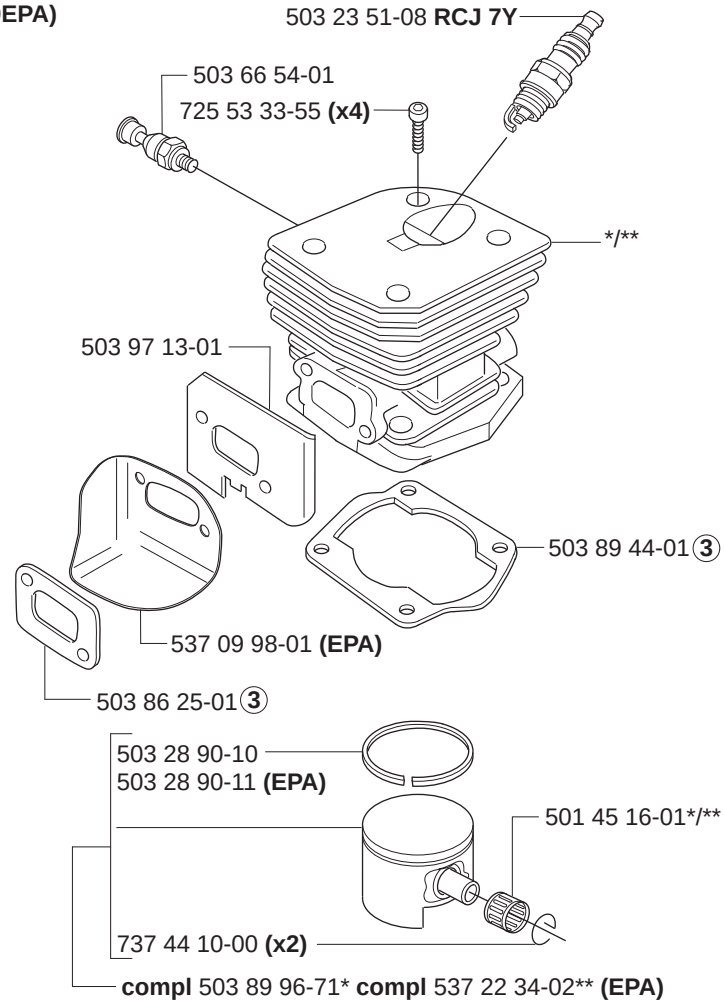

H ***compl** 503 85 80-71

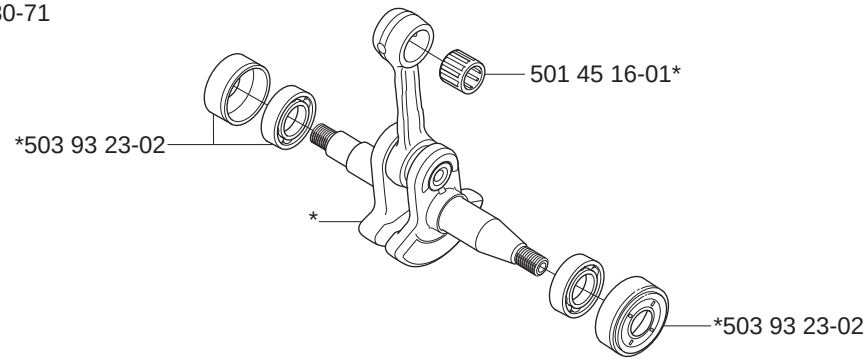

J ***compl** 537 17 20-03

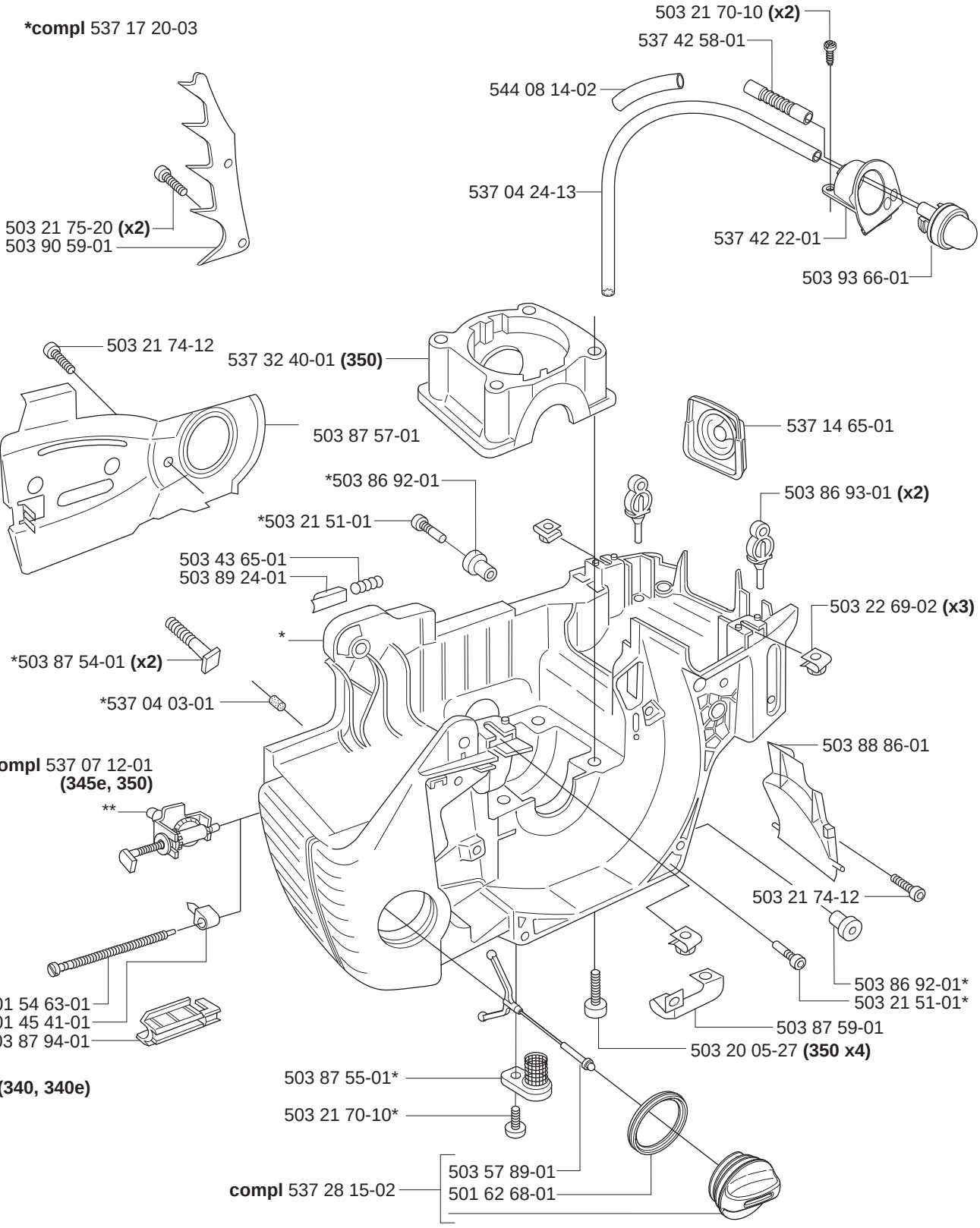

K ***compl** 503 86 37-03

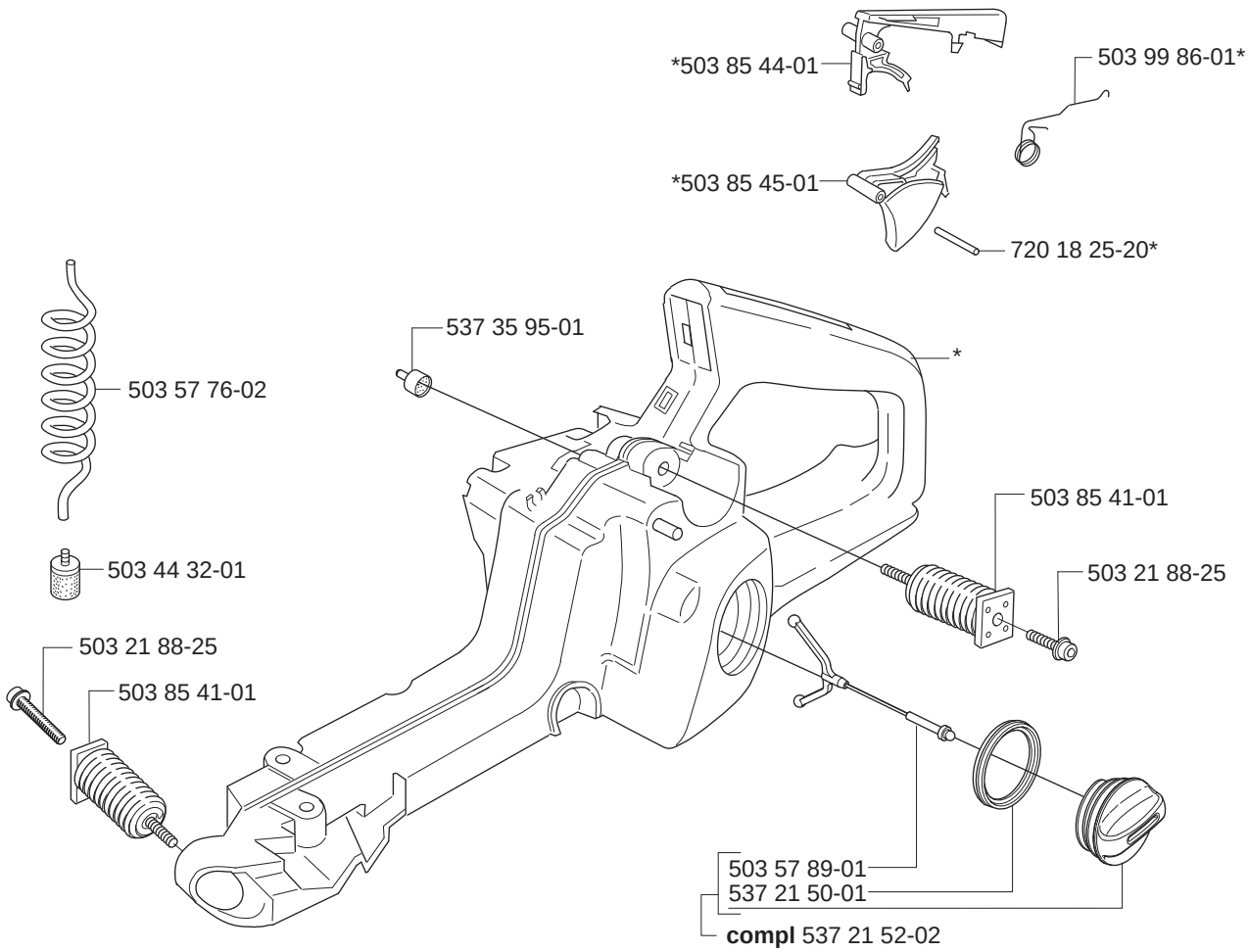

L

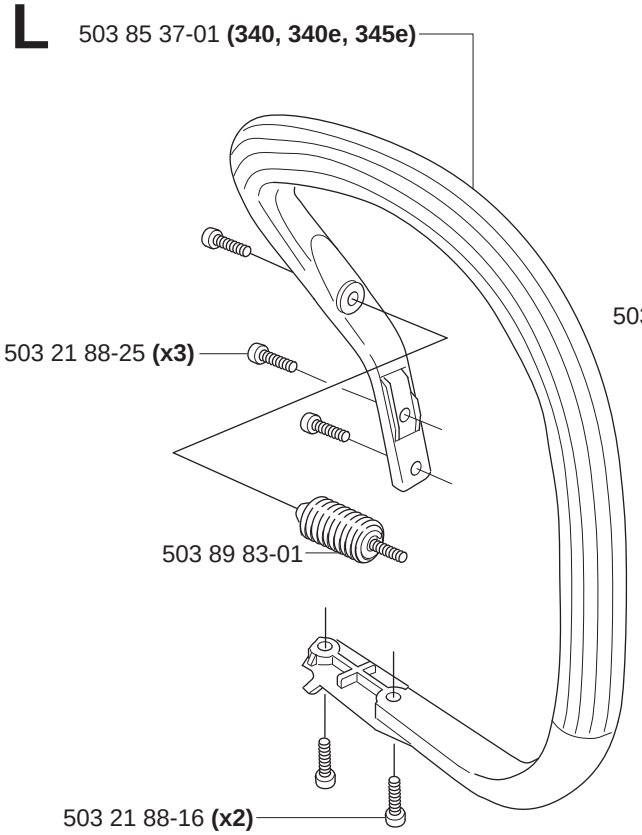

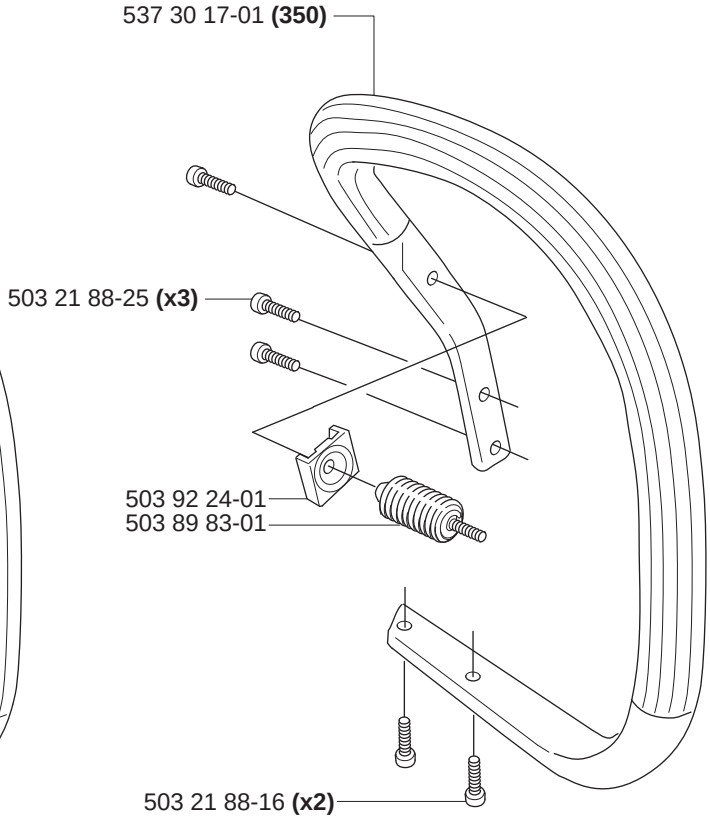

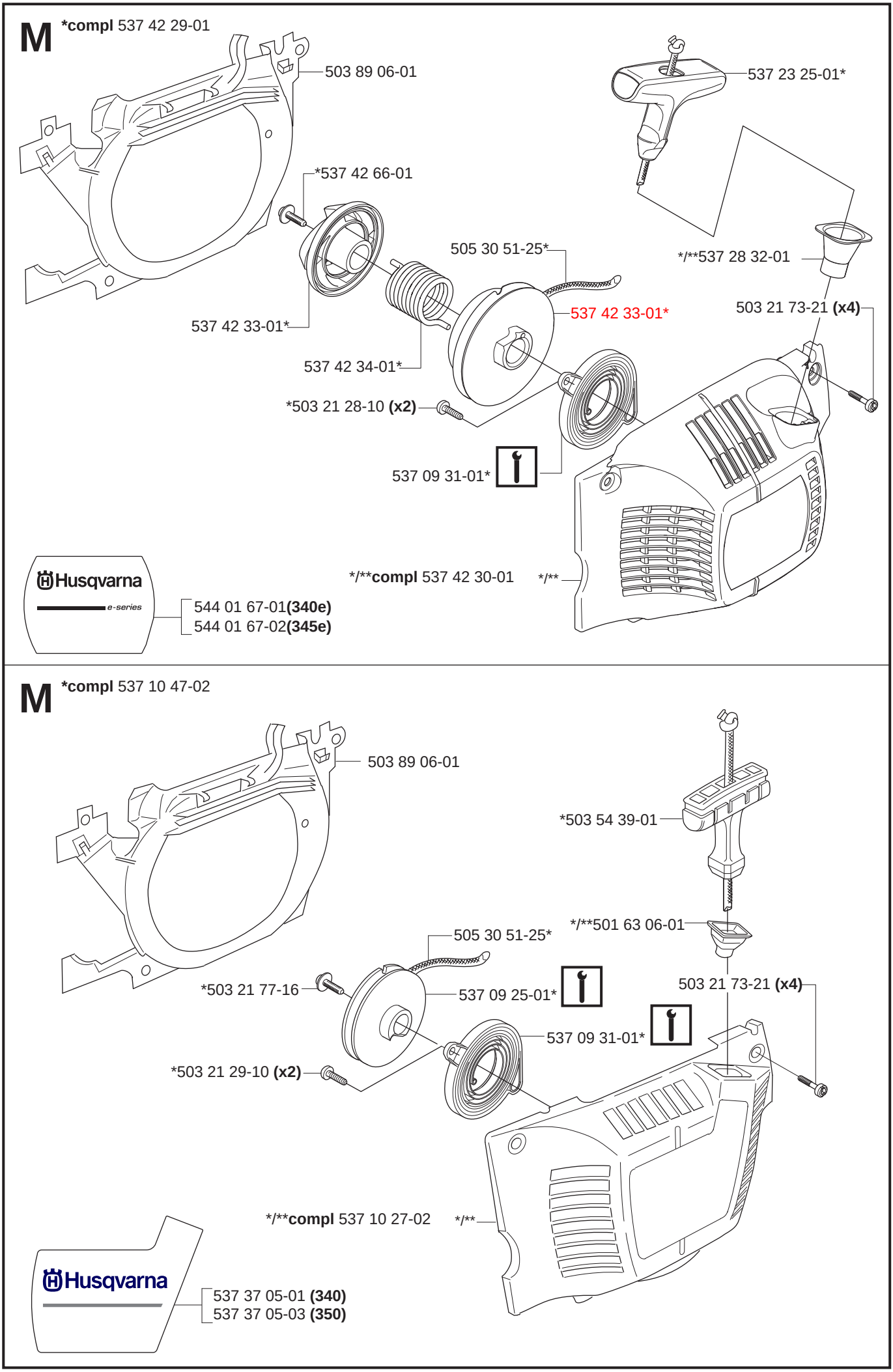
M
*compl 537 42 29-01
503 89 06-01
537 23 25-01*
*537 42 66-01
505 30 51-25*
*/**537 28 32-01
537 42 33-01*
537 42 33-01*
503 21 73-21 (x4)
537 42 34-01*
*503 21 28-10 (x2)
537 09 31-01*
Husqvarna
e-series
544 01 67-01(340e)
544 01 67-02(345e)
*/**compl 537 42 30-01
*/**
M
*compl 537 10 47-02
503 89 06-01
*503 54 39-01
*/**501 63 06-01
505 30 51-25*
*503 21 77-16
537 09 25-01*
503 21 73-21 (x4)
537 09 31-01*
*503 21 29-10 (x2)
*/**compl 537 10 27-02
*/**
Husqvarna
537 37 05-01 (340)
537 37 05-03 (350)

N

***compl** 503 28 32-08 **ZAMA C3-EL18B (340)**

ZAMA C3-EL18B

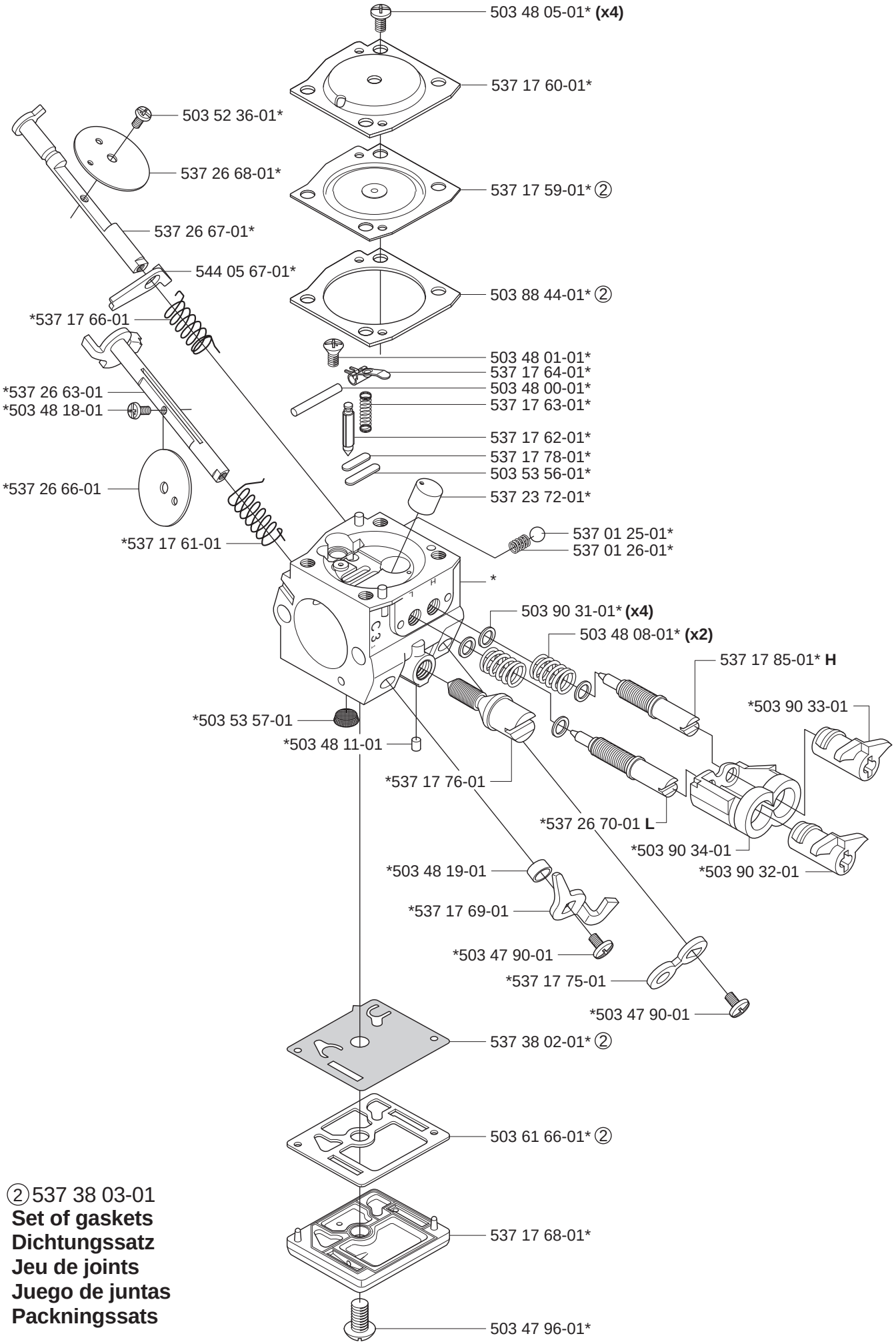

②537 38 03-01
Set of gaskets
Dichtungssatz
Jeu de joints
Juego de juntas
Packningssats

N

***compl** 503 28 32-08 **ZAMA C3-EL32 (340e, 345e, 350)**

ZAMA C3-EL32

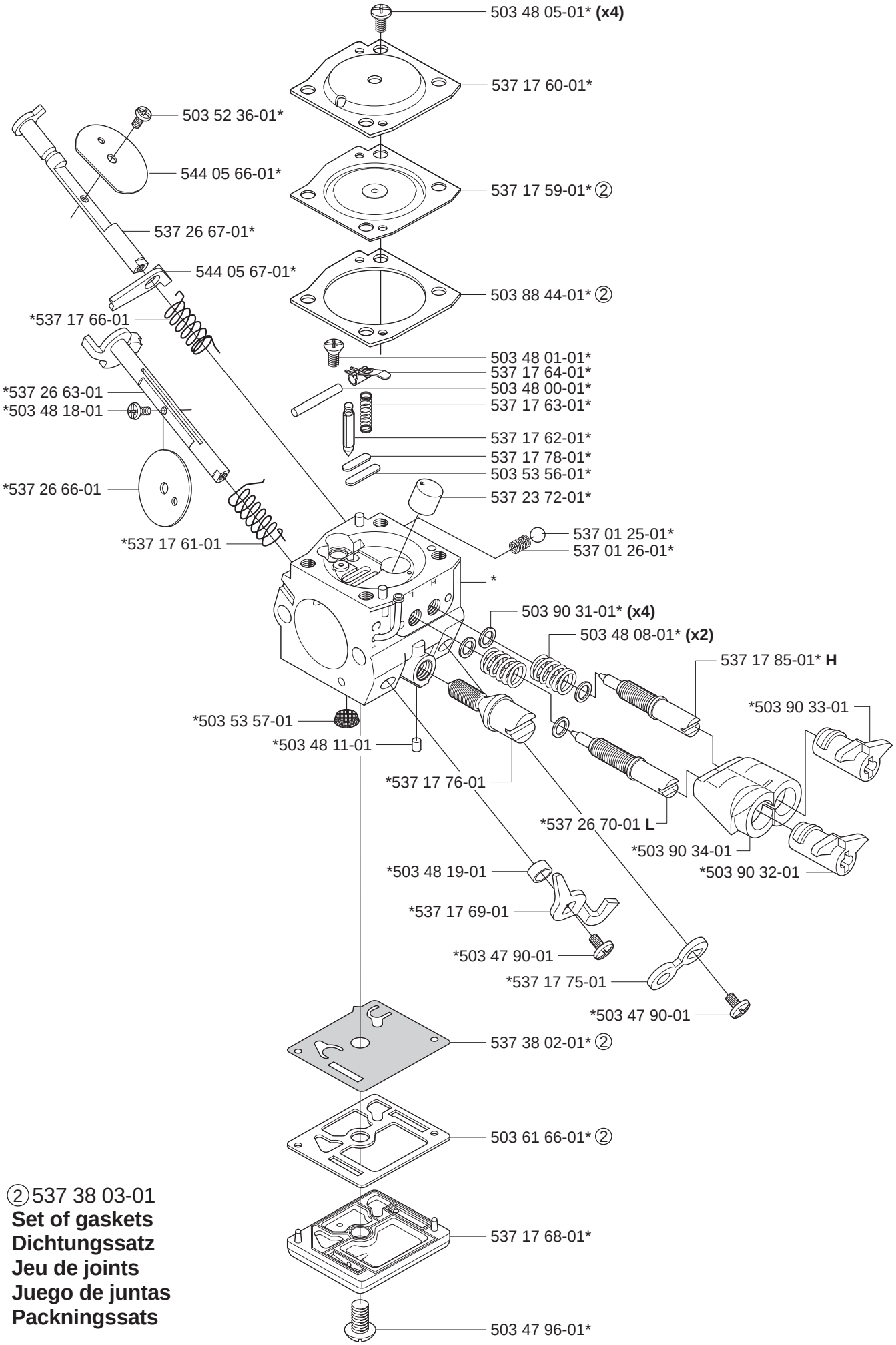

② 537 38 03-01
Set of gaskets
Dichtungssatz
Jeu de joints
Juego de juntas
Packningssats

P

Tillbehör
Accessories
Zubehöre
Accessoires
Accesorios

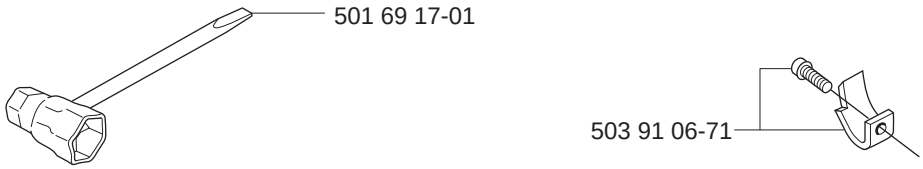

Winter kit

***compl** 537 42 29-01 **(340e, 345e)**

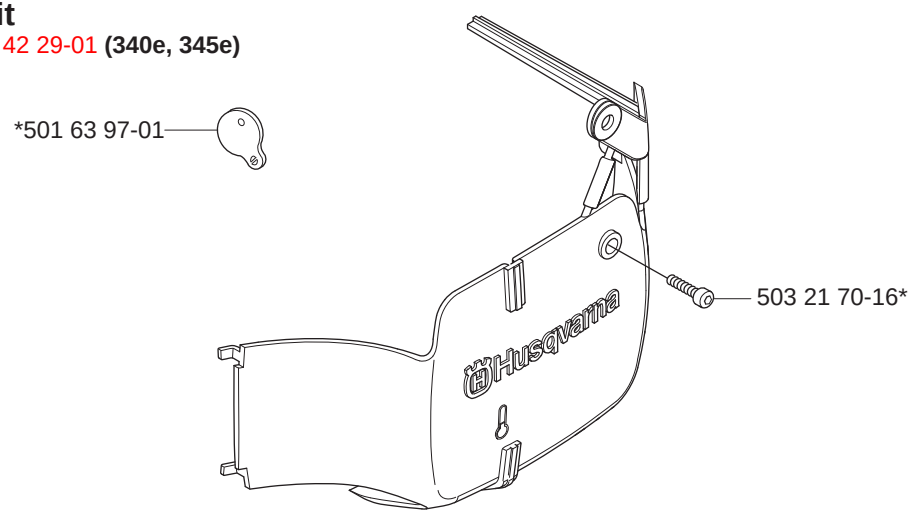

Winter kit

***compl** 537 04 28-02 **(340, 350)**

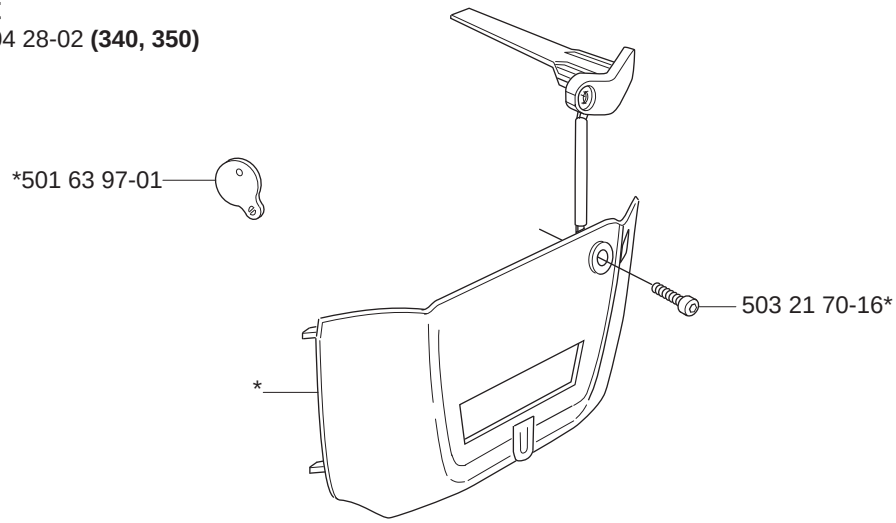

Q

Up to 991499999

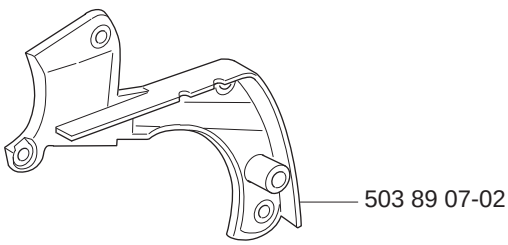

From 991500001 to 001400001

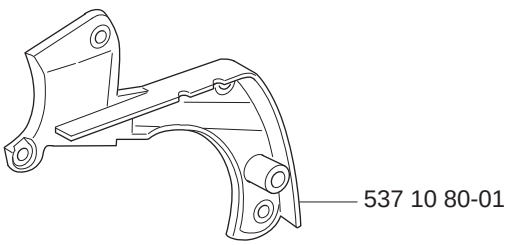

Up to 010604200 (340)
Up to 010602850 (345)
Up to 010702450 (350)

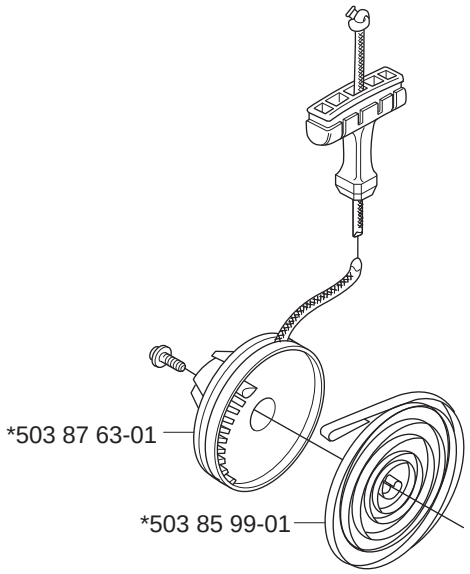

Up to 052299999 (345)



Up to 000601101 (340, 345)

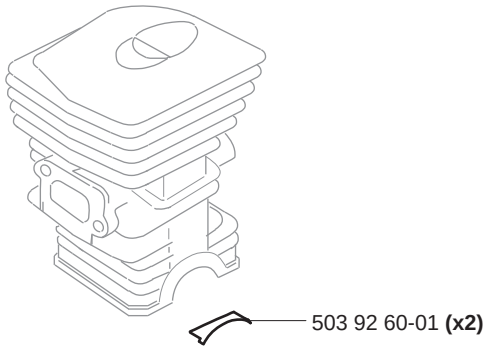

Up to 030103001
Only EPA (350)

***compl** 503 89 99-71 **(350)**

