Husqvarna
350 (2004-03)

Rozkres je dokumentace výrobce (© příslušný výrobce) a slouží k identifikaci dílů. Pro výběr dílu se vždy řiďte katalogovým číslem.

Q **Tillbehör**
Accessories
Zubehöre
Accessoires
Accesorios

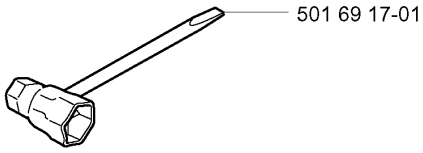

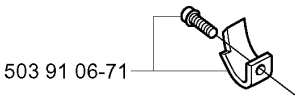

Winter kit
***compl** 537 04 28-02

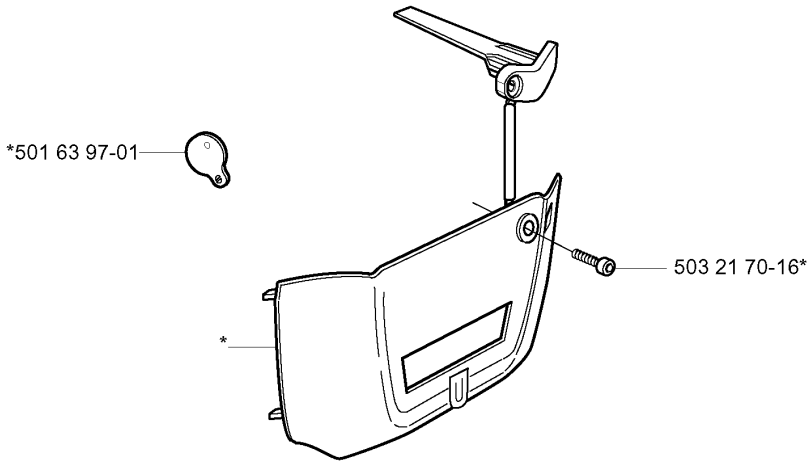

G

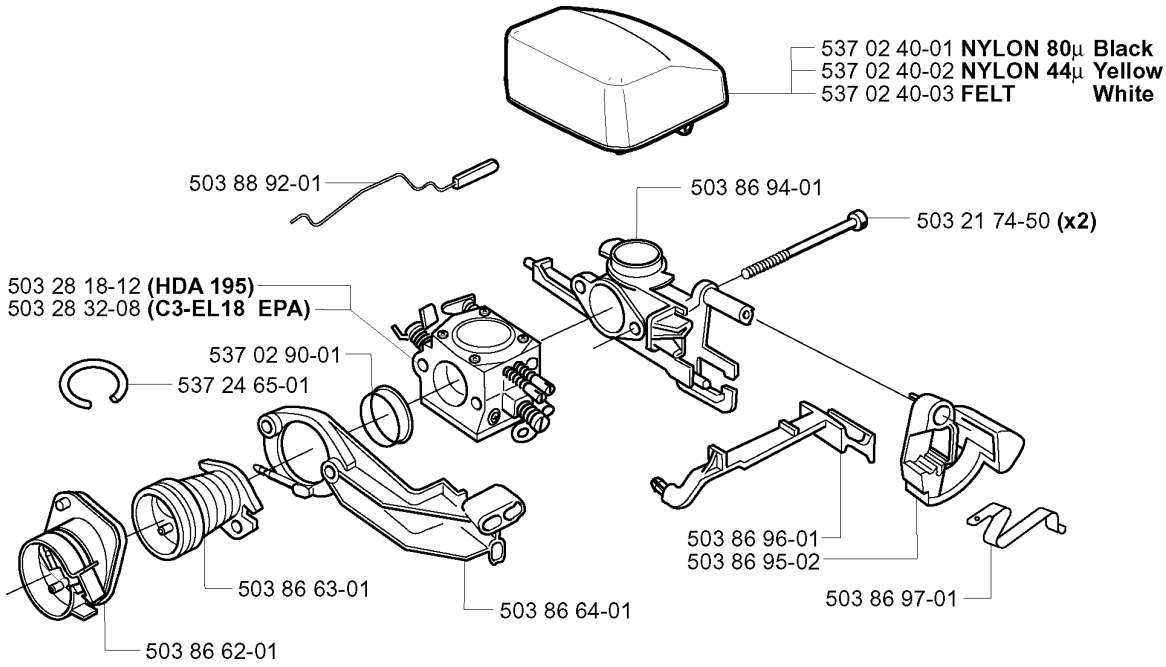
537 02 40-01 NYLON 80µ Black
537 02 40-02 NYLON 44µ Yellow
537 02 40-03 FELT White
503 88 92-01
503 86 94-01
503 21 74-50 (x2)
503 28 18-12 (HDA 195)
503 28 32-08 (C3-EL18 EPA)
537 02 90-01
537 24 65-01
503 86 96-01
503 86 95-02
503 86 97-01
503 86 63-01
503 86 64-01
503 86 62-01

N **compl** 503 28 18-12 **Walbro HDA 195**

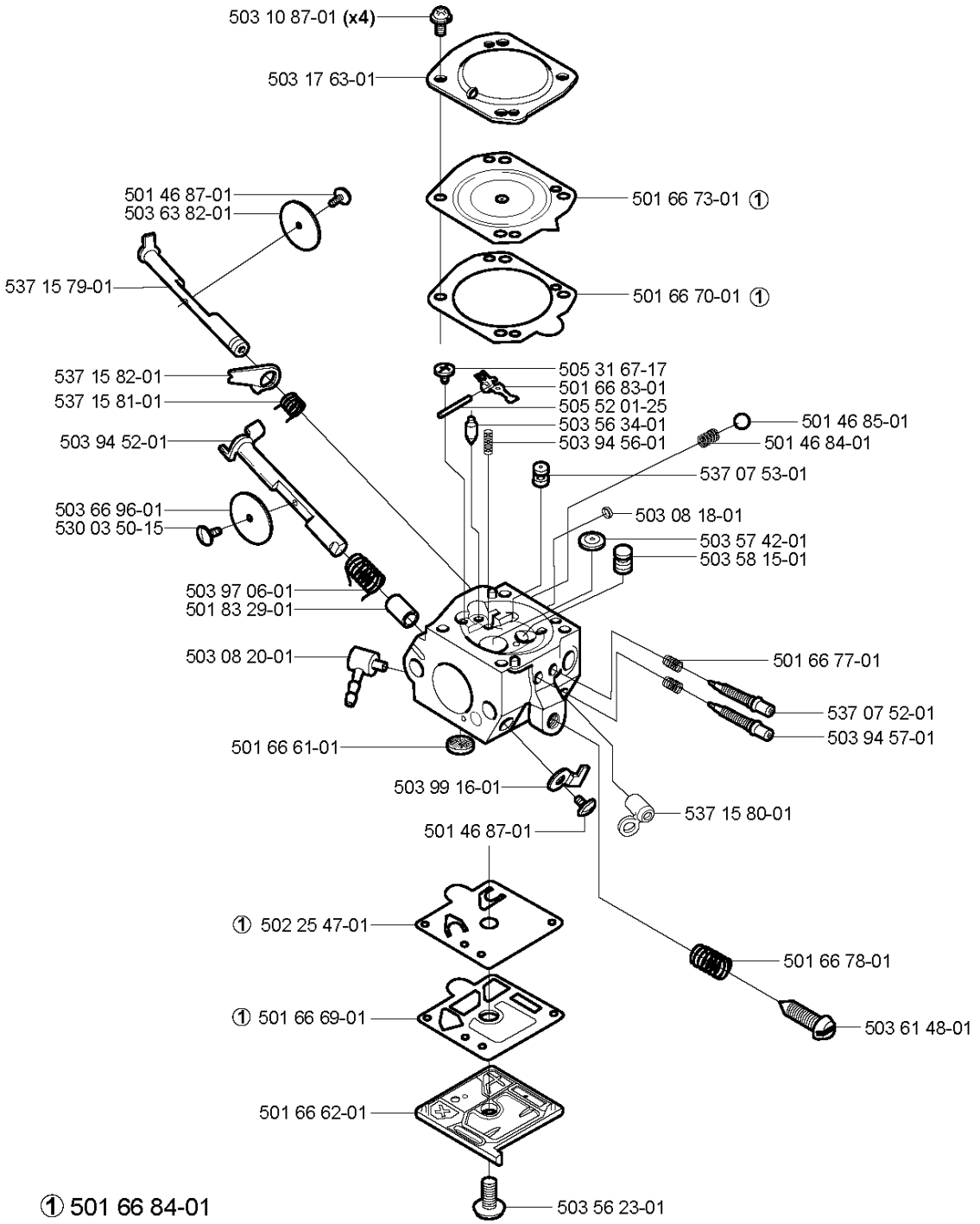

① 501 66 84-01
Set of gaskets
Dichtungssatz
Jeu de joints
Juego de juntas
Packningssats

P ***compl** 503 28 32-08 **ZAMA C3-EL18 (EPA)**

ZAMA C3-EL18

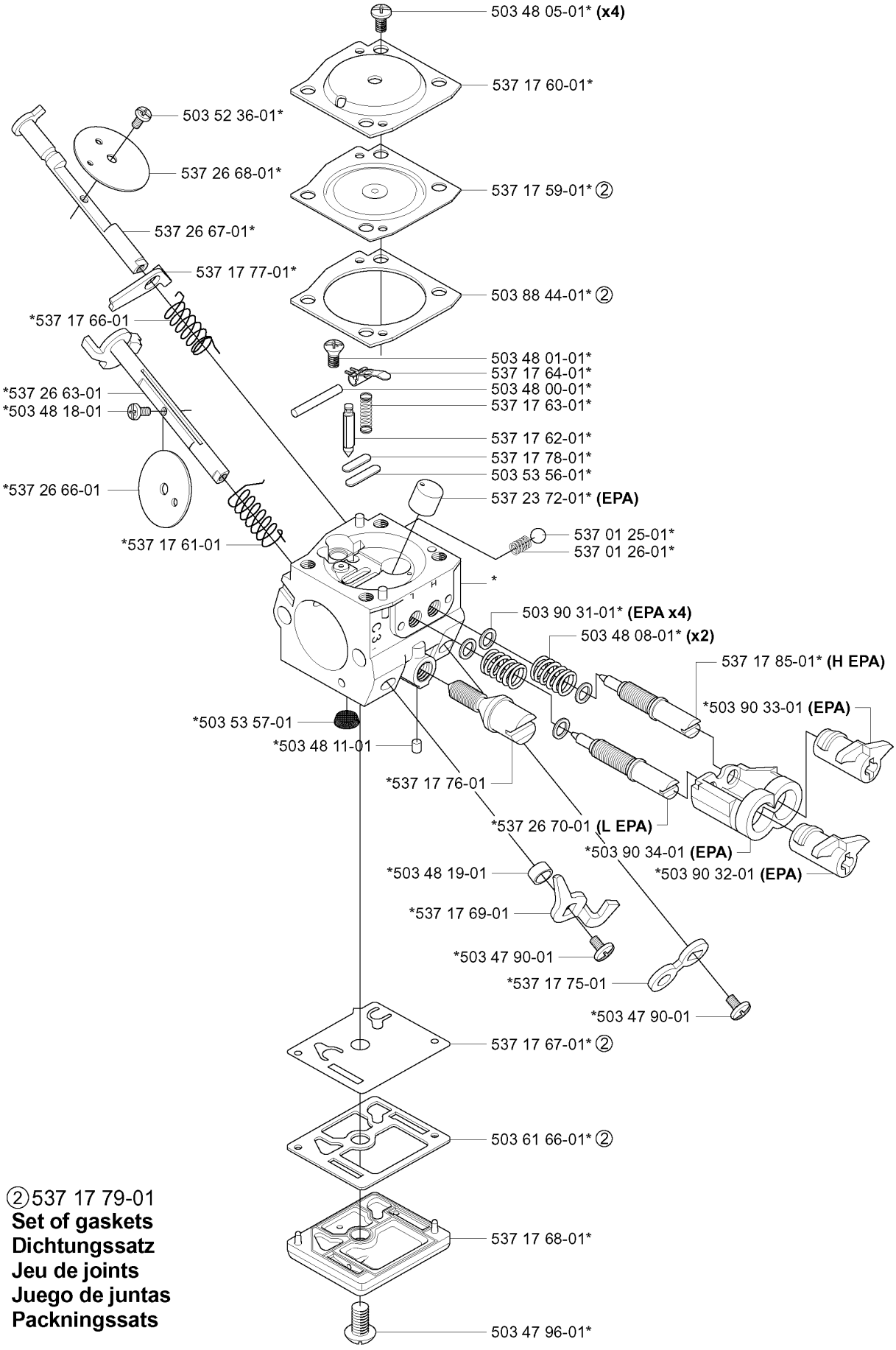

②537 17 79-01
Set of gaskets
Dichtungssatz
Jeu de joints
Juego de juntas
Packningssats

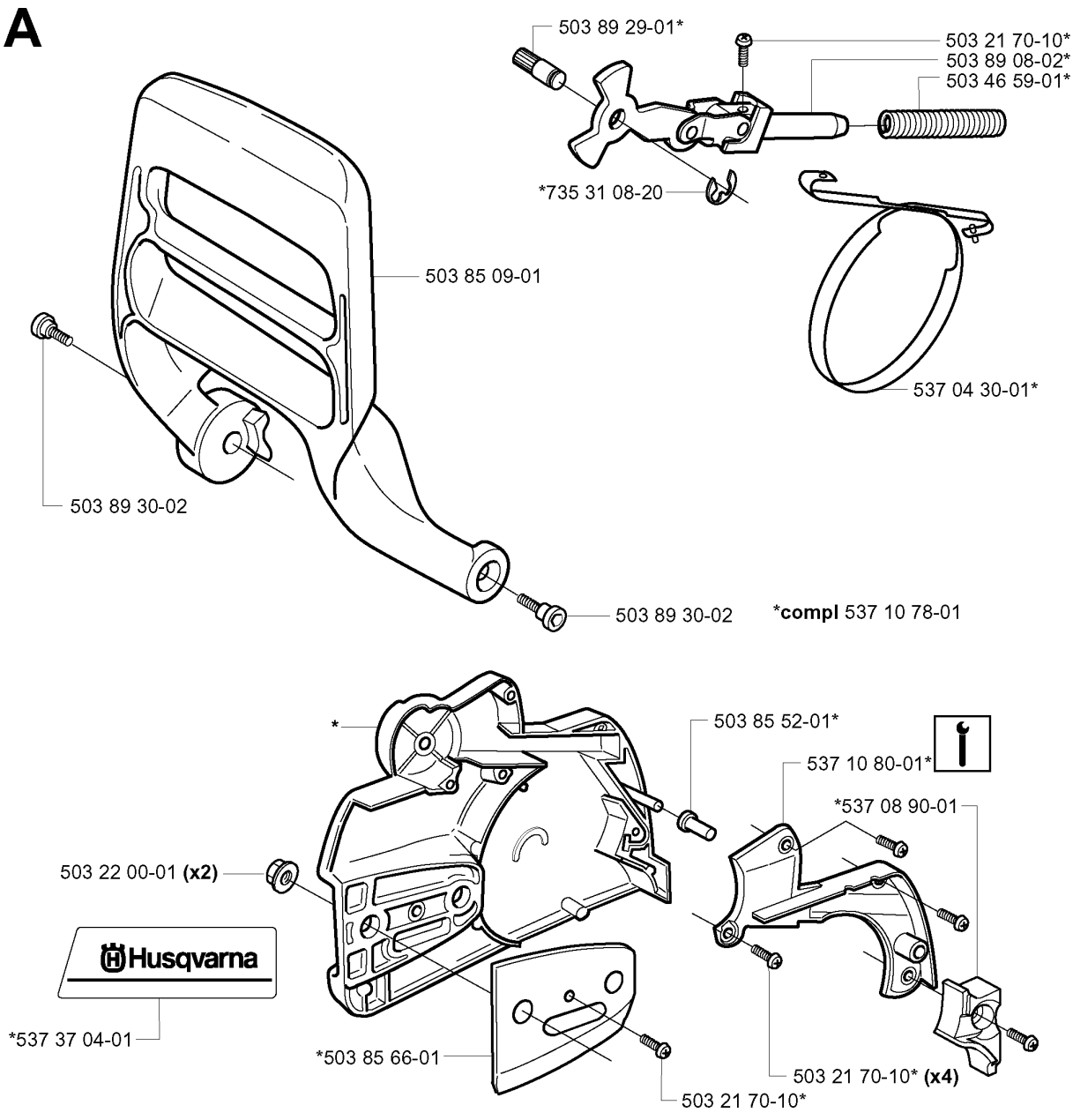
A
503 89 29-01*
503 21 70-10*
503 89 08-02*
503 46 59-01*
*735 31 08-20
503 85 09-01
537 04 30-01*
503 89 30-02
503 89 30-02
*compl 537 10 78-01
*
503 85 52-01*
537 10 80-01*
*537 08 90-01
503 22 00-01 (x2)
*537 37 04-01
*503 85 66-01
503 21 70-10* (x4)
503 21 70-10*

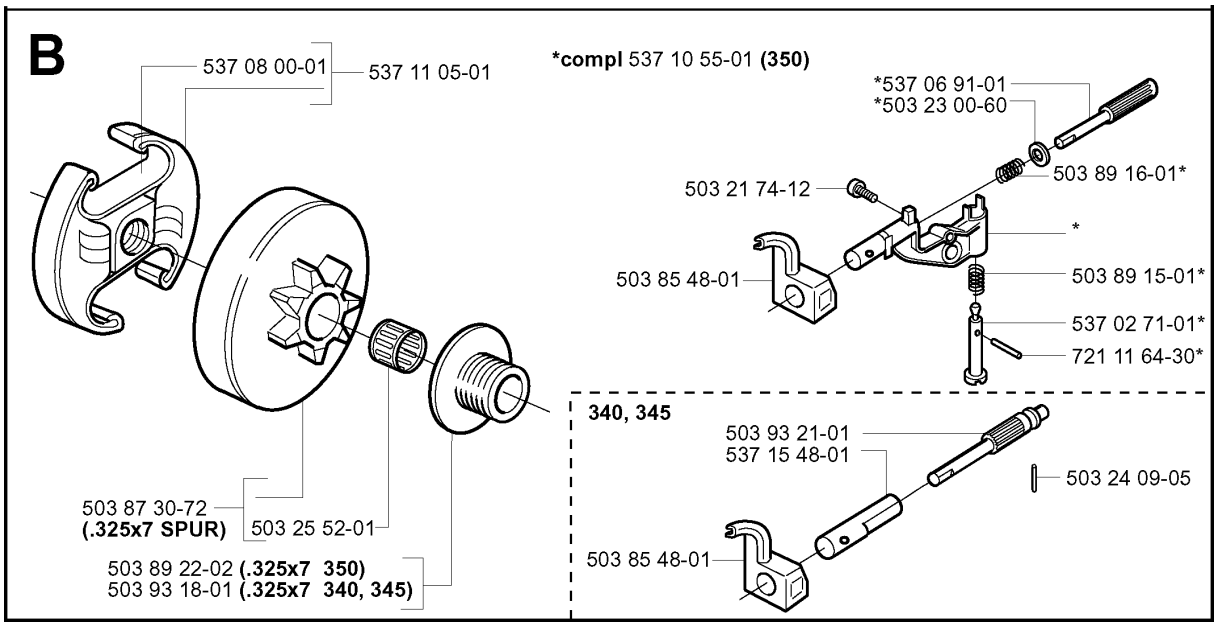
B
537 08 00-01
537 11 05-01
503 87 30-72
(.325x7 SPUR)
503 25 52-01
503 89 22-02 (.325x7 350)
503 93 18-01 (.325x7 340, 345)
*compl 537 10 55-01 (350)
*537 06 91-01
*503 23 00-60
503 89 16-01*
503 21 74-12
*
503 85 48-01
503 89 15-01*
537 02 71-01*
721 11 64-30*
340, 345
503 93 21-01
537 15 48-01
503 24 09-05
503 85 48-01

C ***compl** 503 91 05-01

*503 98 74-01

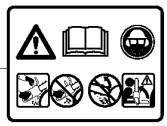

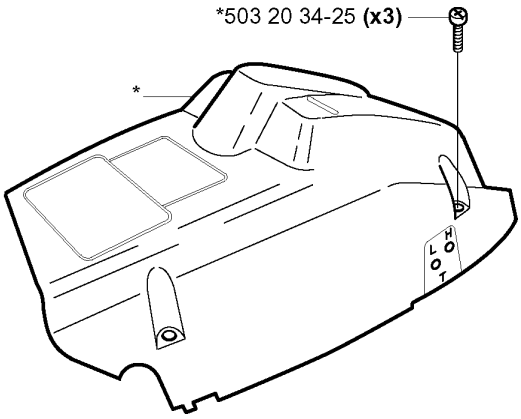

H *compl 537 17 20-01

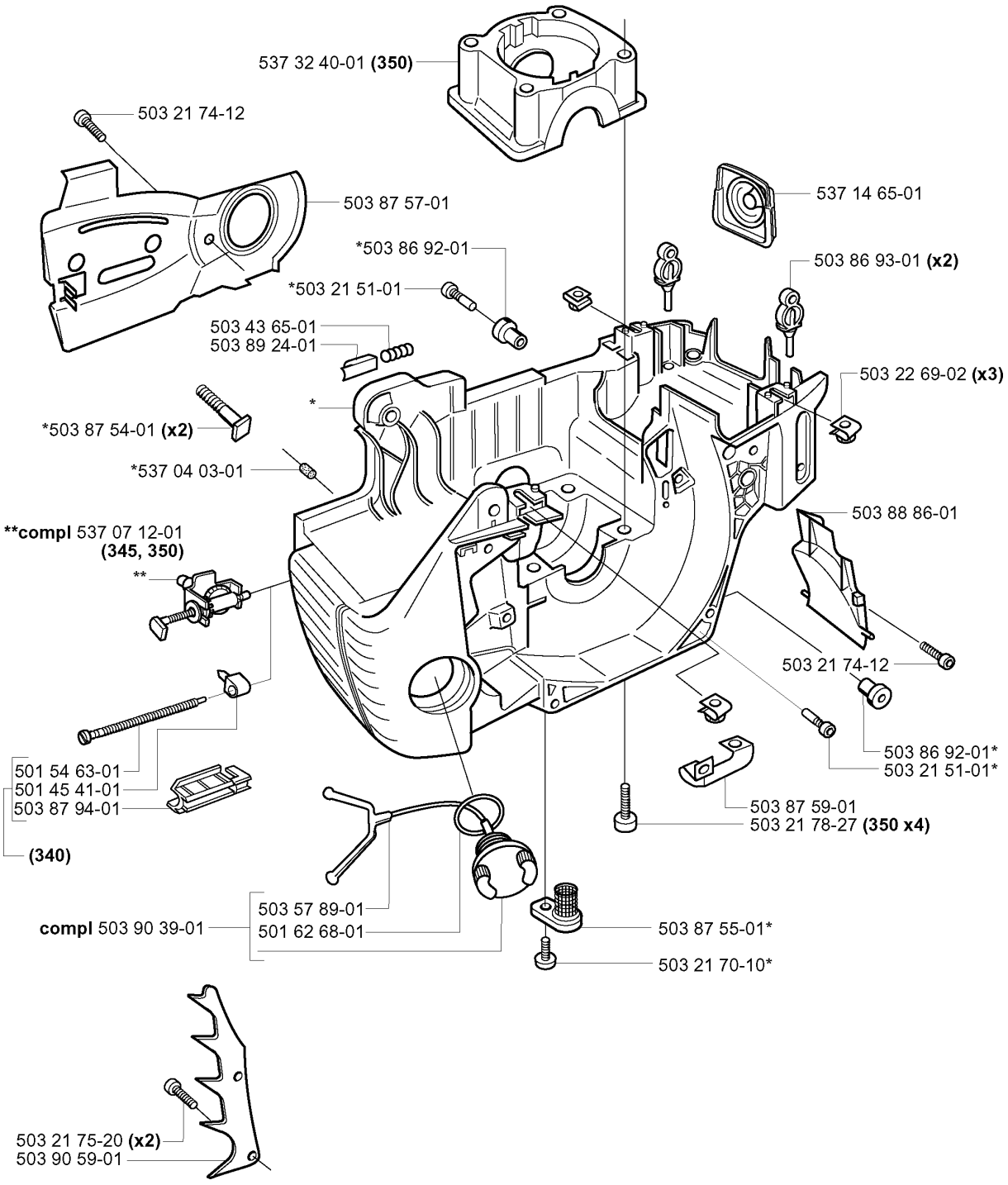

E ***compl** 503 85 80-71

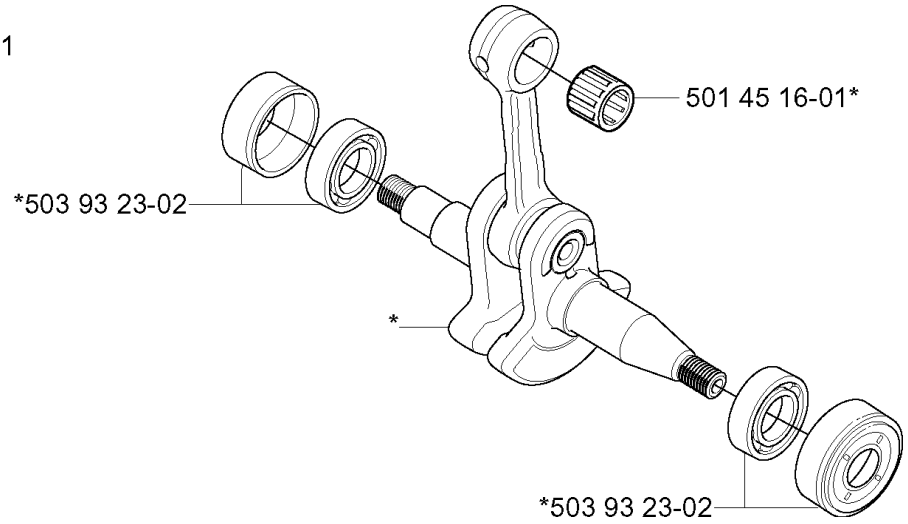

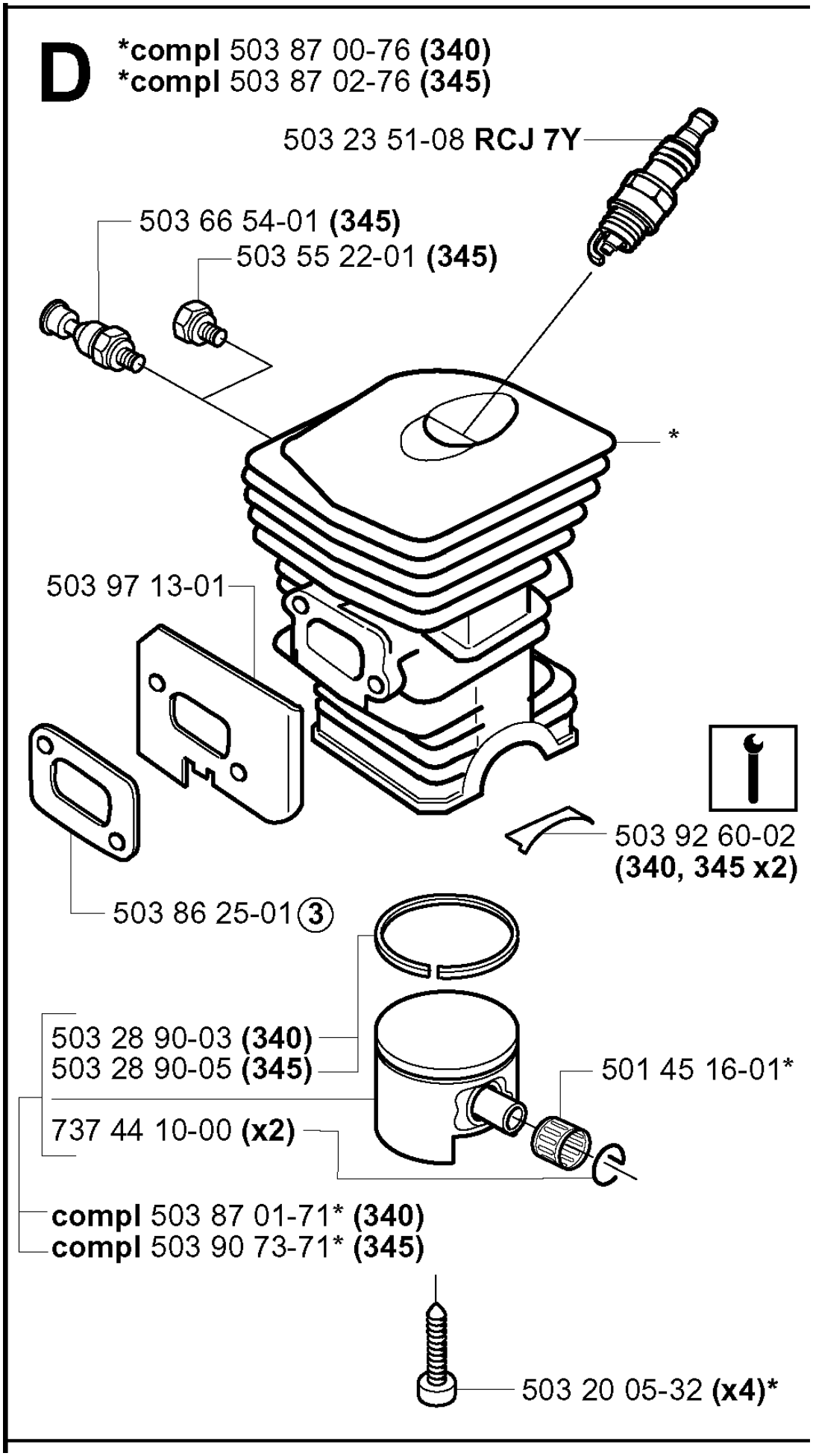
D
*compl 503 87 00-76 (340)
*compl 503 87 02-76 (345)
503 23 51-08 RCJ 7Y
503 66 54-01 (345)
503 55 22-01 (345)
*
503 97 13-01
503 92 60-02
(340, 345 x2)
503 86 25-01 3
503 28 90-03 (340)
503 28 90-05 (345)
501 45 16-01*
737 44 10-00 (x2)
compl 503 87 01-71* (340)
compl 503 90 73-71* (345)
503 20 05-32 (x4)*

G ****compl** 537 25 30-02 **(350EPA)**
***compl** 503 86 99-71 **(350)**

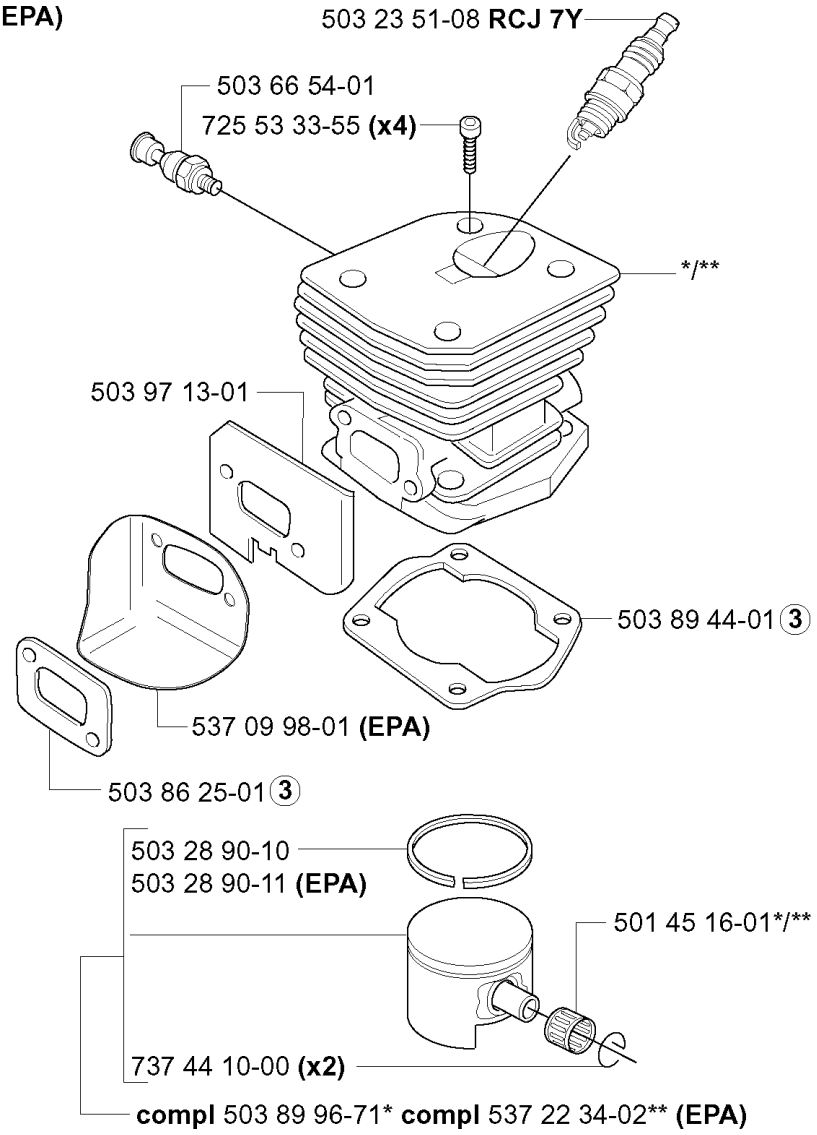

J ***compl** 503 86 37-71

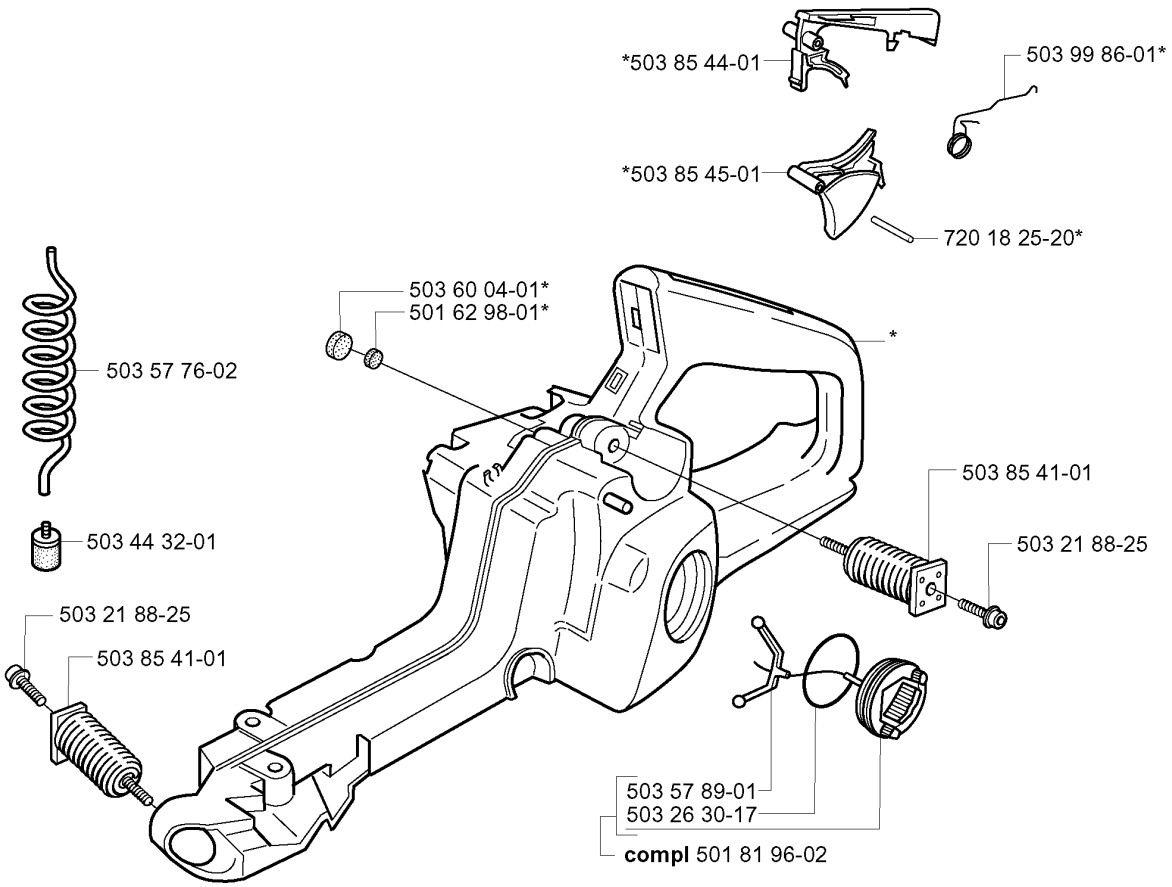

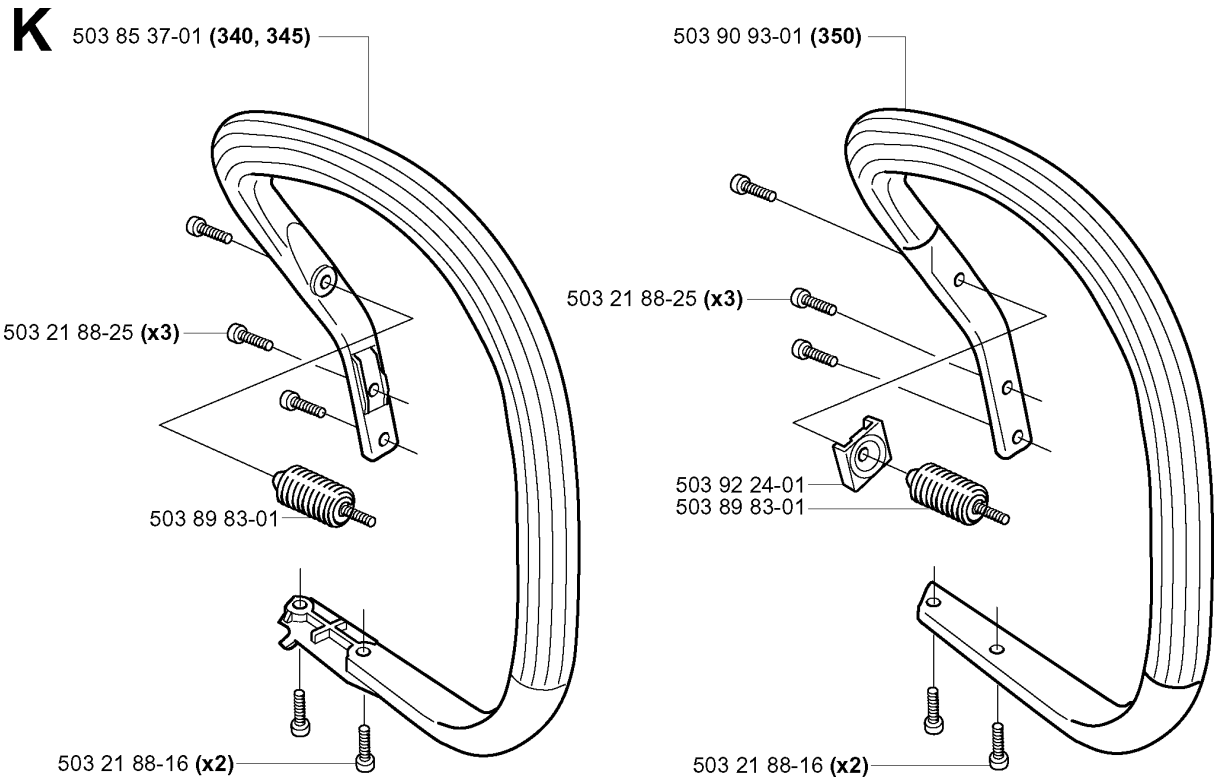
K
503 85 37-01 (340, 345)
503 21 88-25 (x3)
503 89 83-01
503 21 88-16 (x2)
503 90 93-01 (350)
503 21 88-25 (x3)
503 92 24-01
503 89 83-01
503 21 88-16 (x2)

L

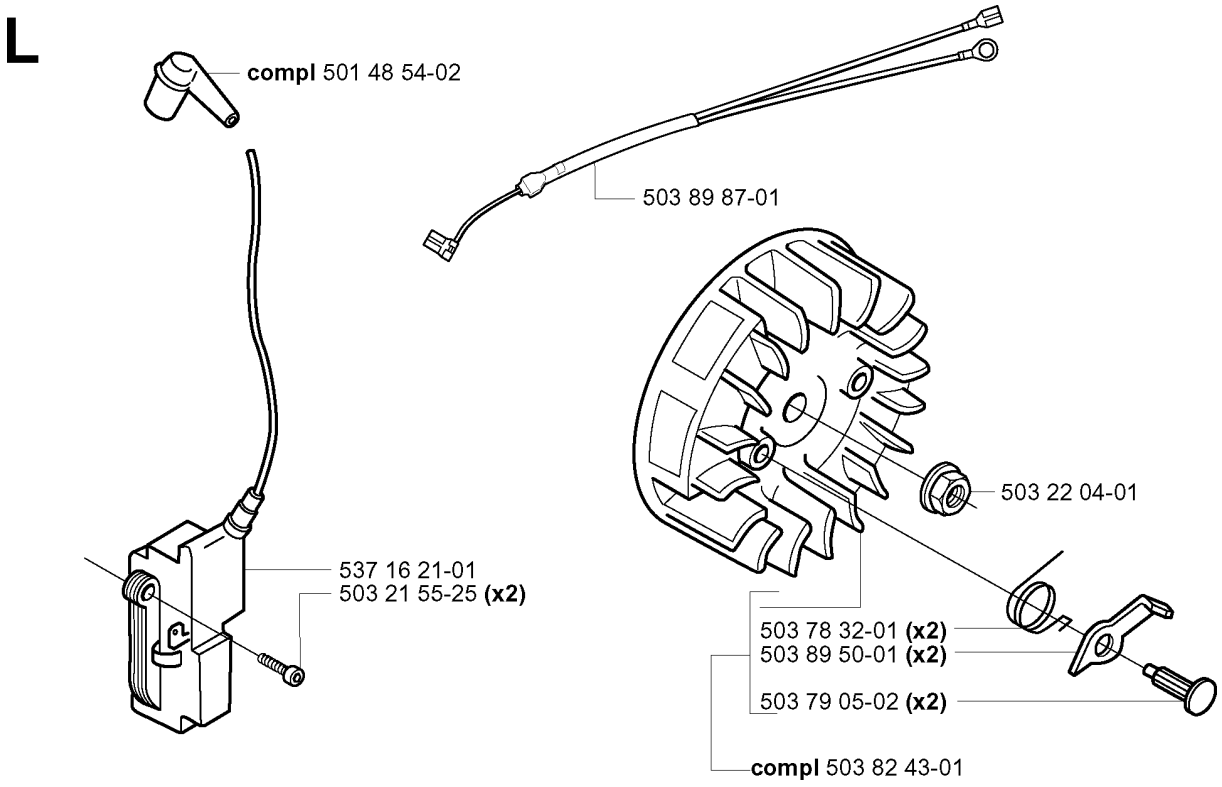
compl 501 48 54-02
503 89 87-01
503 22 04-01
537 16 21-01
503 21 55-25 (x2)
503 78 32-01 (x2)
503 89 50-01 (x2)
503 79 05-02 (x2)
compl 503 82 43-01

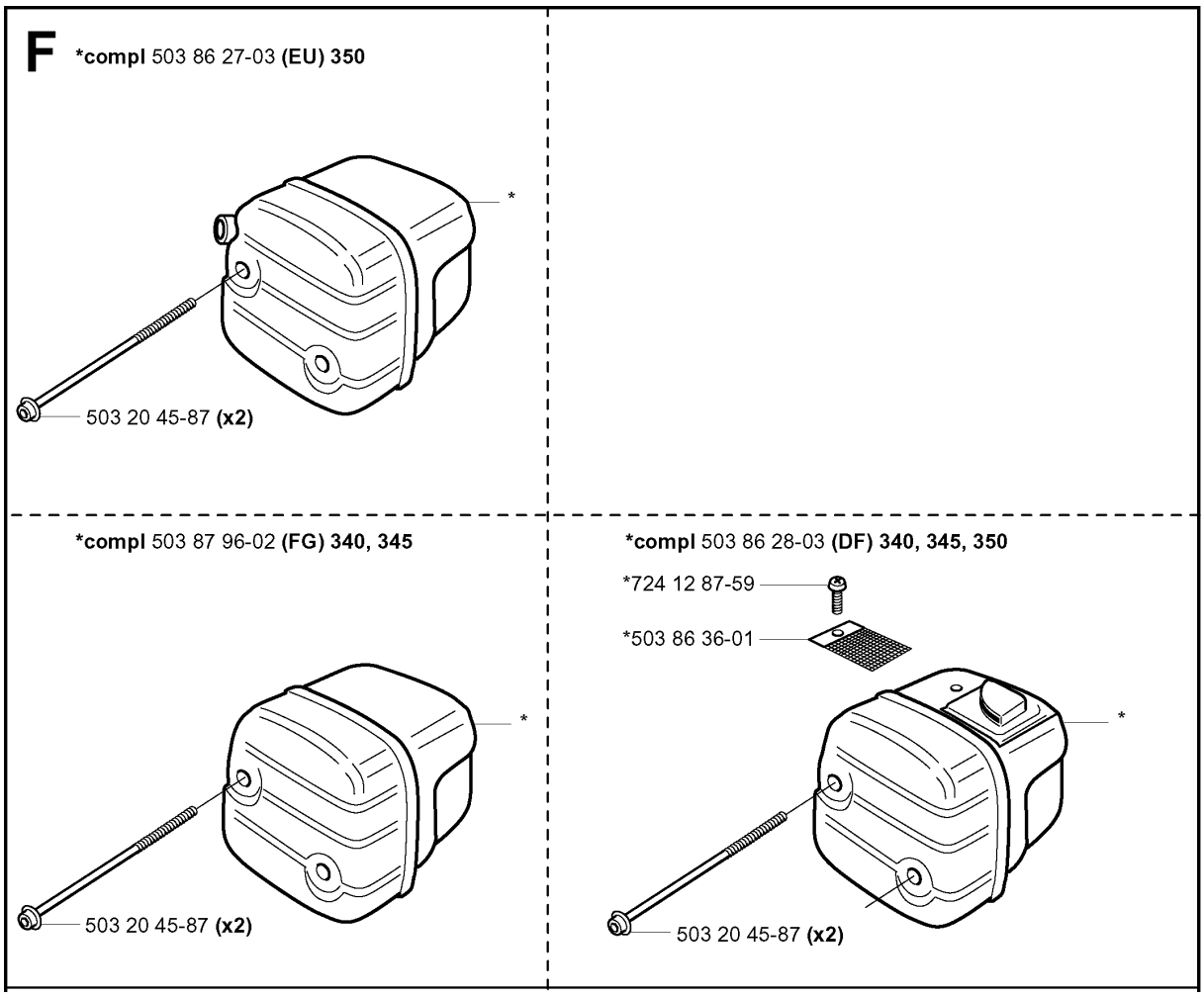
F
*compl 503 86 27-03 (EU) 350
*
503 20 45-87 (x2)
*compl 503 87 96-02 (FG) 340, 345
*
503 20 45-87 (x2)
*compl 503 86 28-03 (DF) 340, 345, 350
*724 12 87-59
*503 86 36-01
*
503 20 45-87 (x2)

R

Up to 030103001
Only EPA (350)

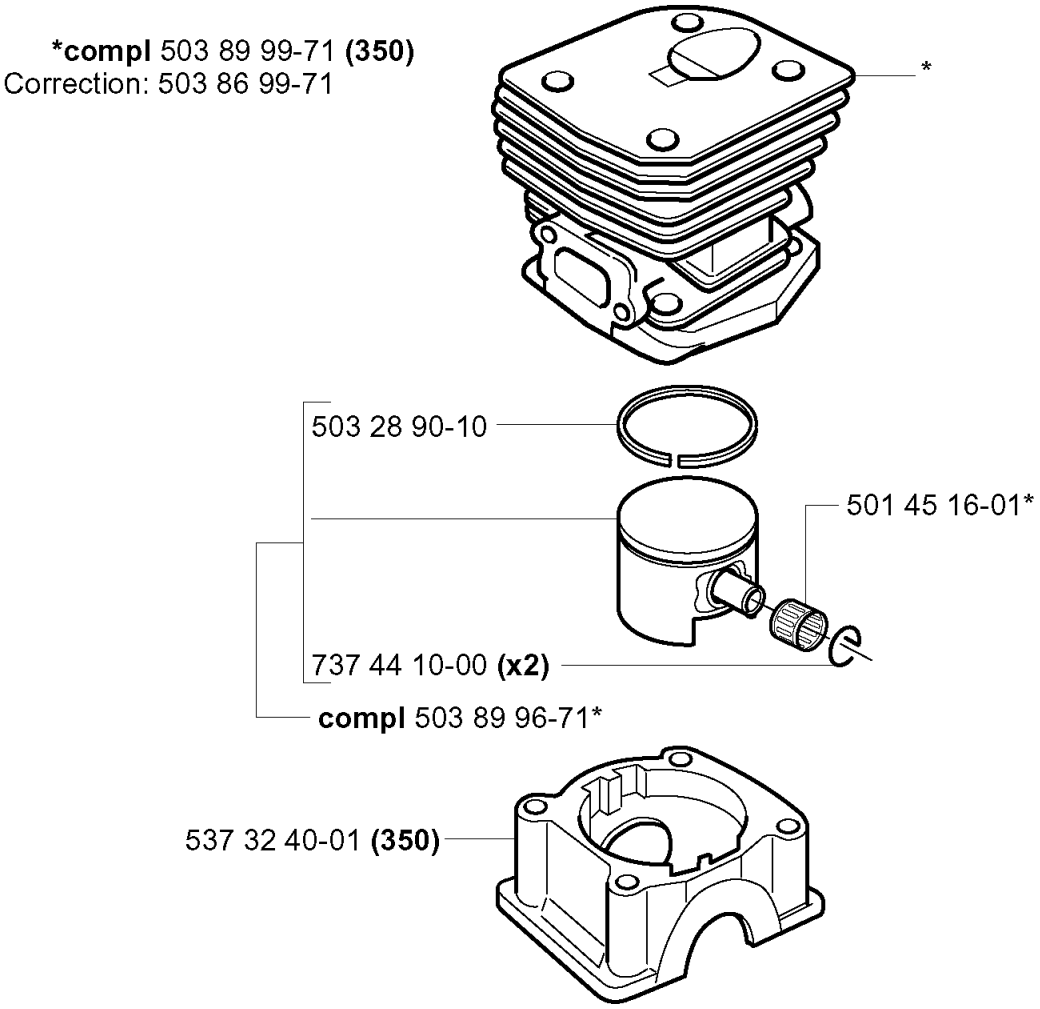

R

Up to 030103001
Only EPA (350)

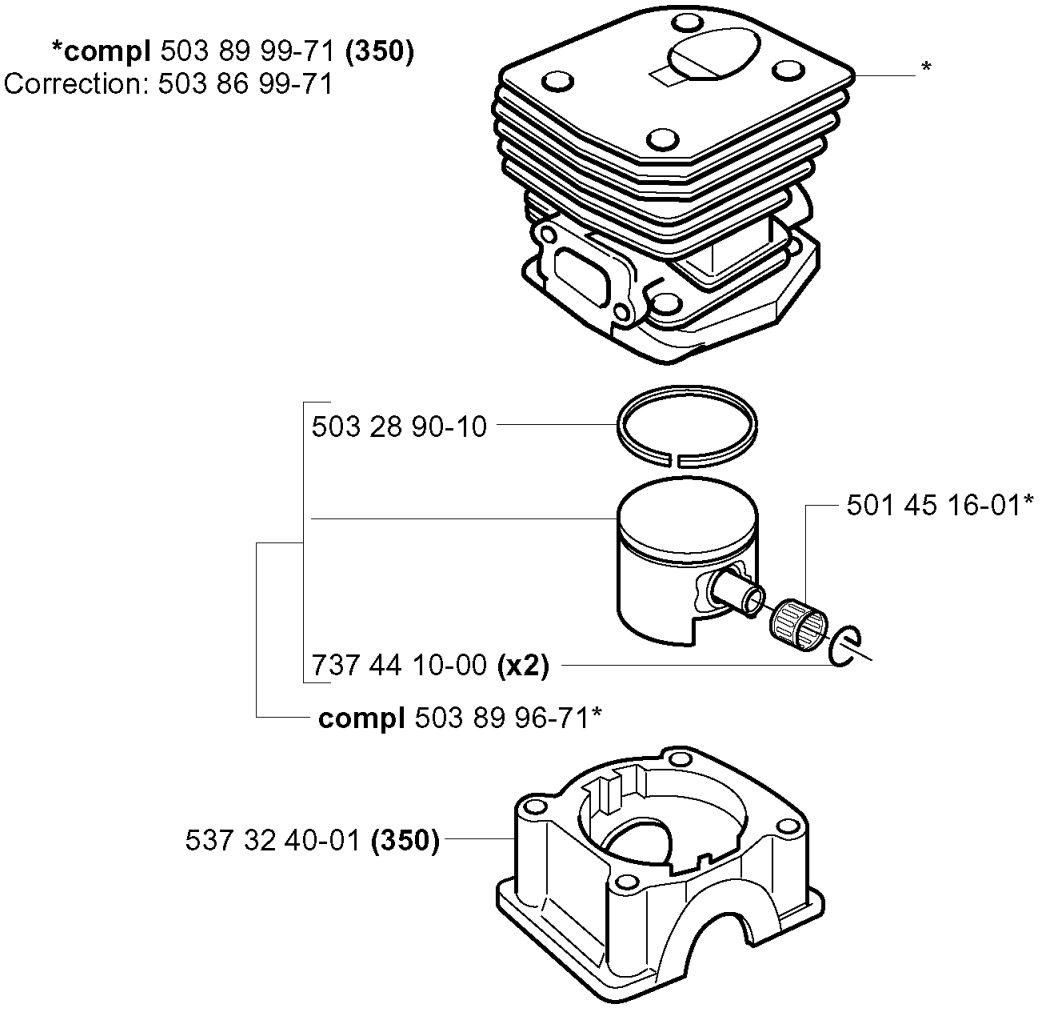

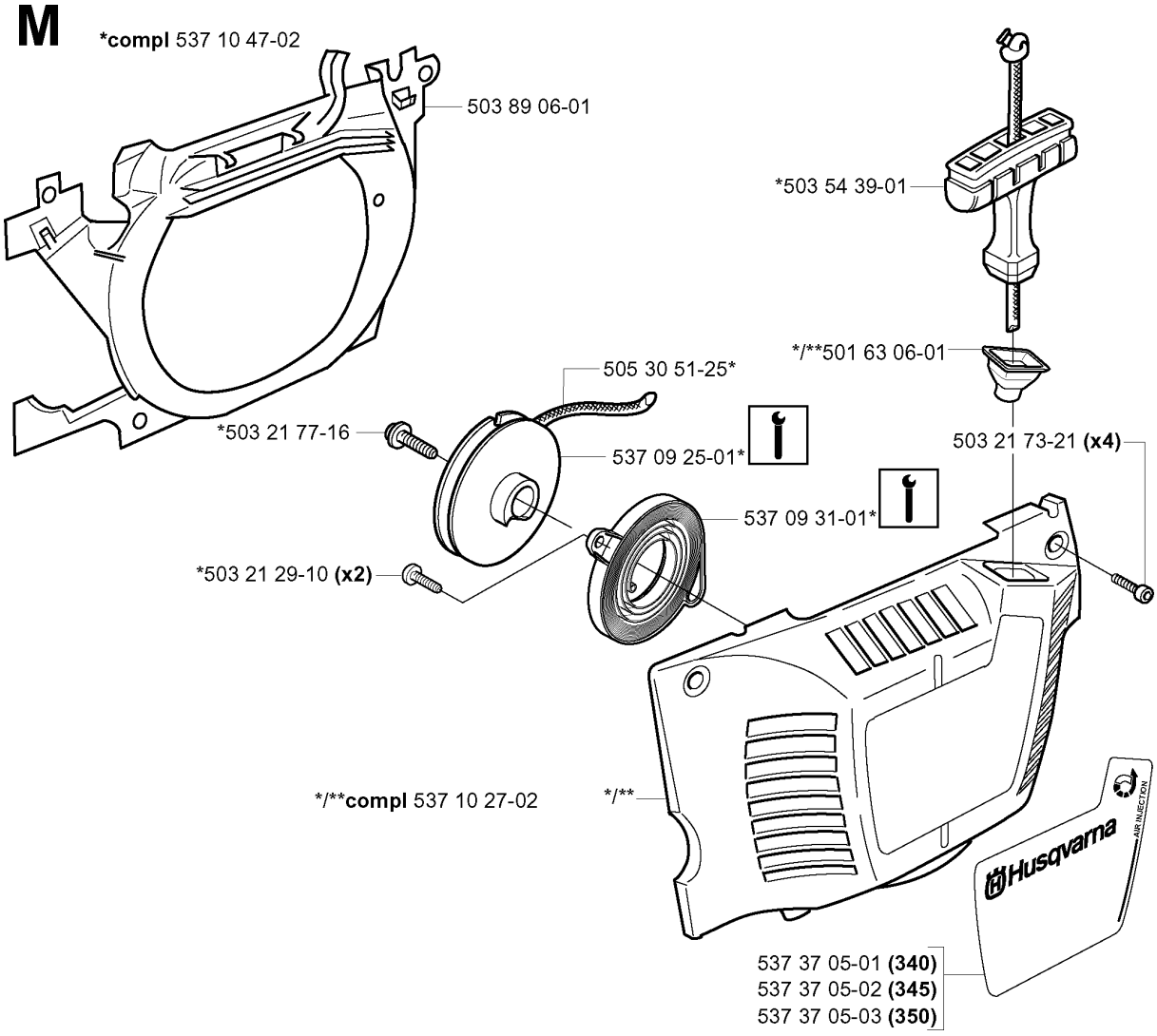
M
*compl 537 10 47-02
503 89 06-01
*503 54 39-01
*/**501 63 06-01
505 30 51-25*
*503 21 77-16
537 09 25-01*
503 21 73-21 (x4)
537 09 31-01*
*503 21 29-10 (x2)
*/**compl 537 10 27-02
*/**
Husqvarna
AIR INJECTION
537 37 05-01 (340)
537 37 05-02 (345)
537 37 05-03 (350)