Husqvarna
340 (2006-06)

Rozkres je dokumentace výrobce (© příslušný výrobce) a slouží k identifikaci dílů. Pro výběr dílu se vždy řiďte katalogovým číslem.

A 340, 340e, 345e, 350

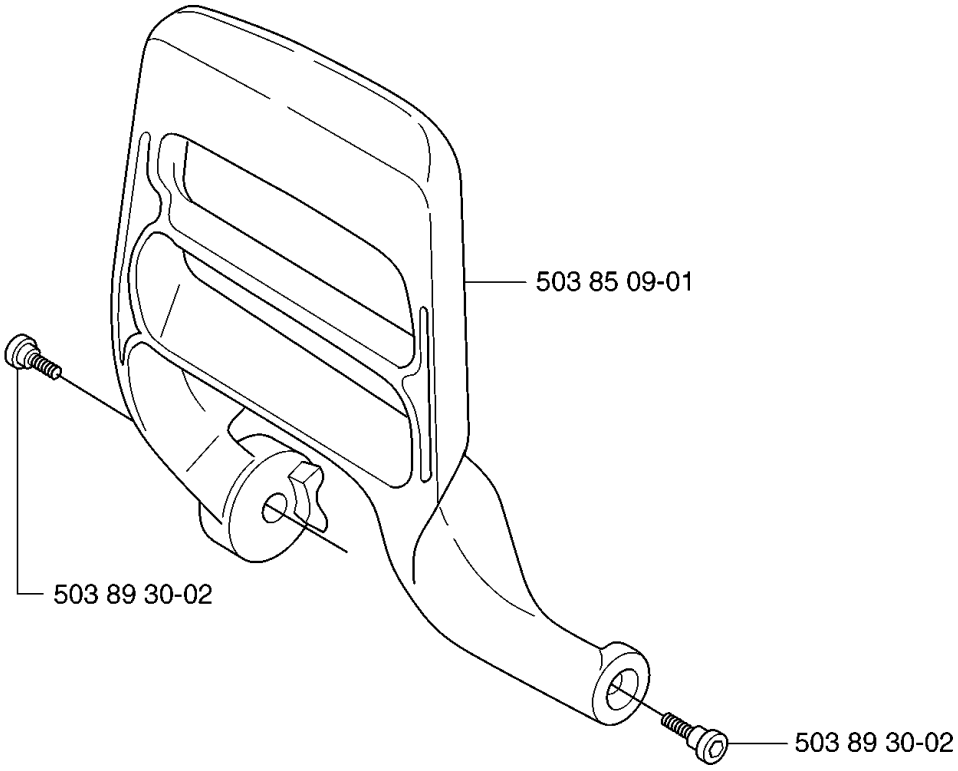

B ***compl** 537 10 78-03 **340, 340e, 350**

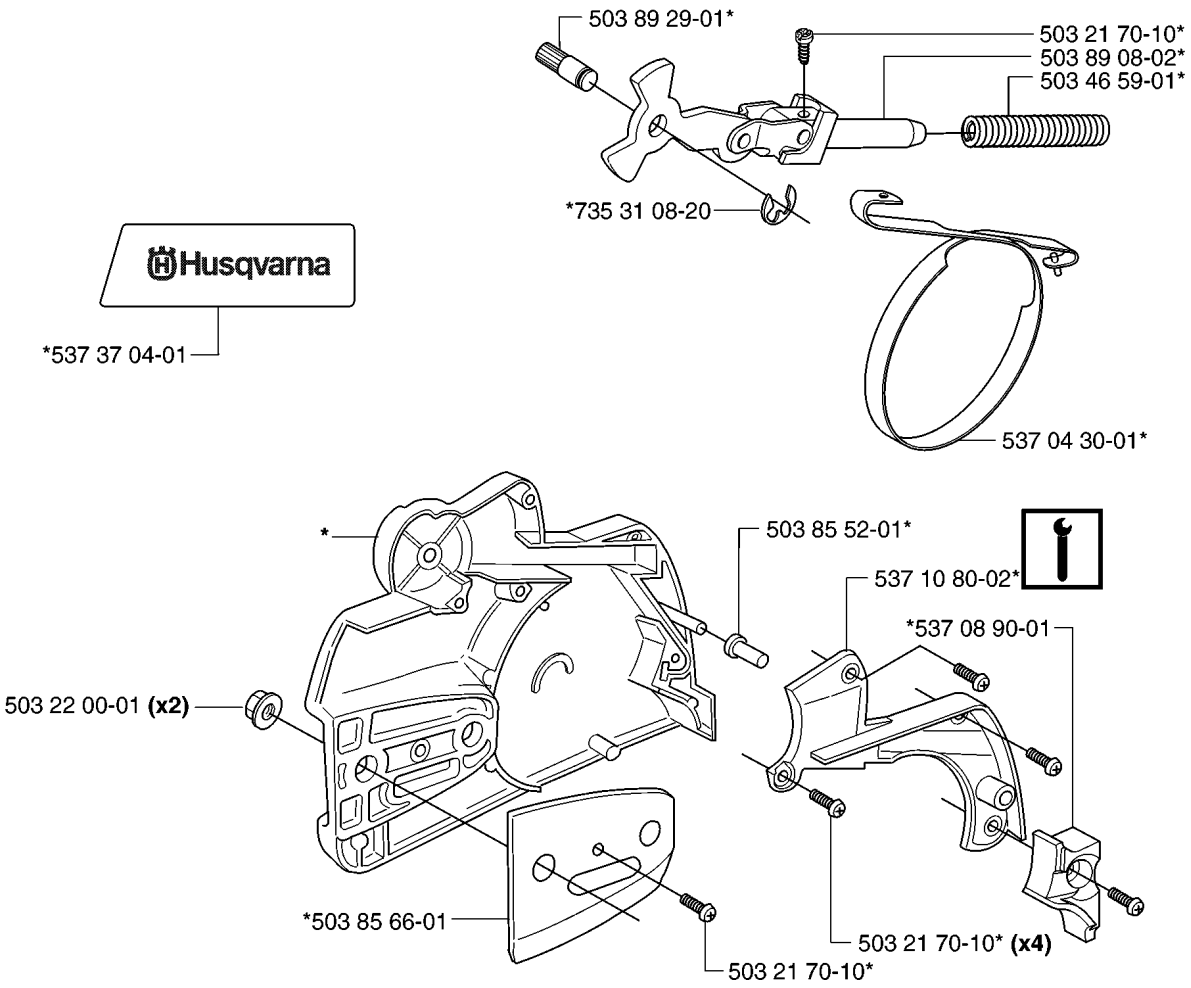

B ***compl** 544 21 72-01 **345e**

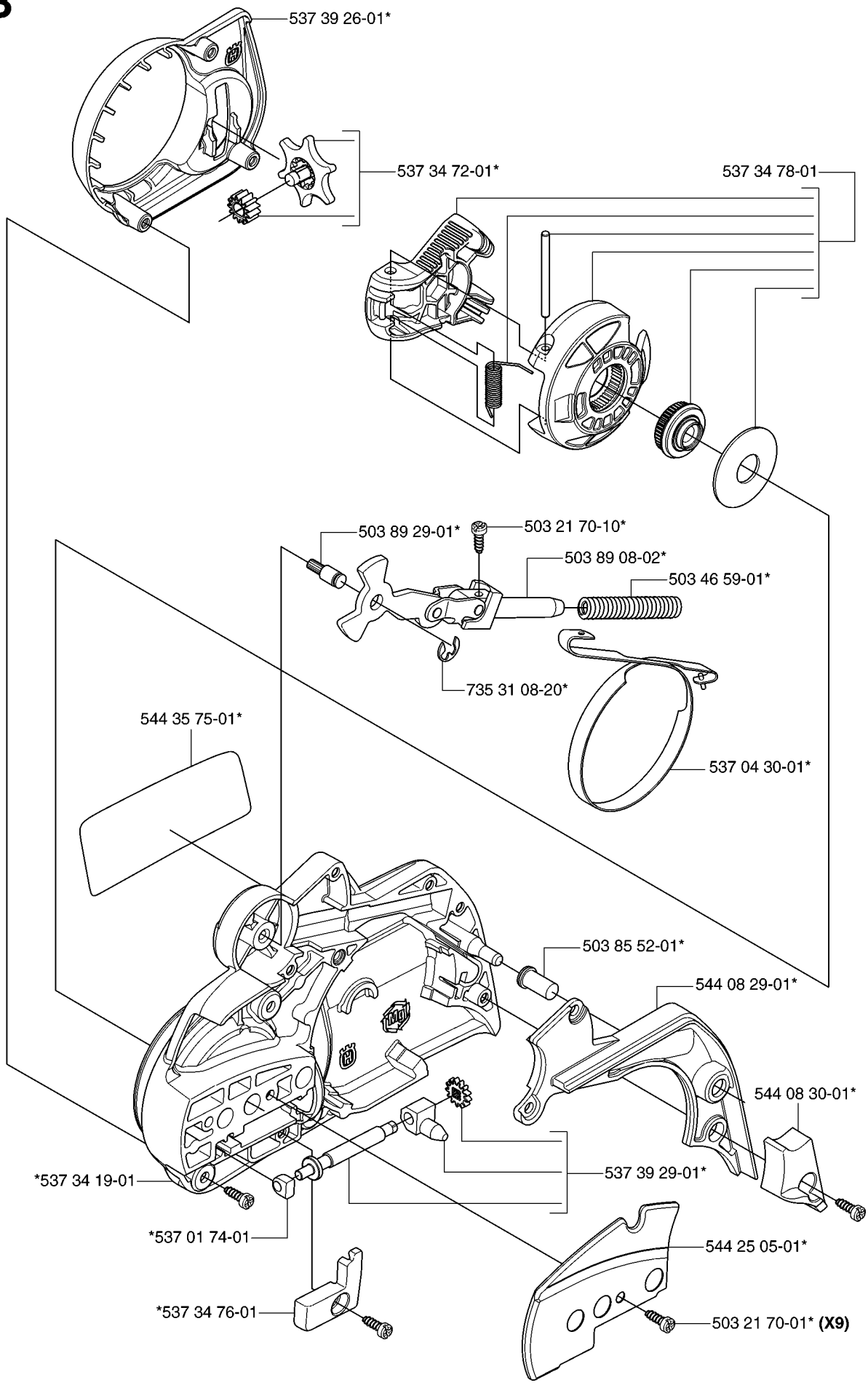

C 340, 340e

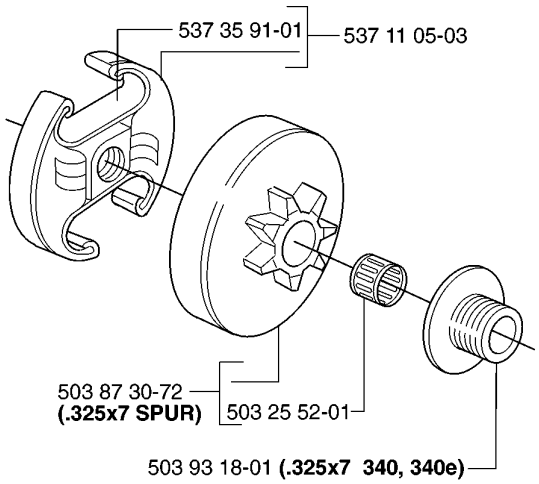

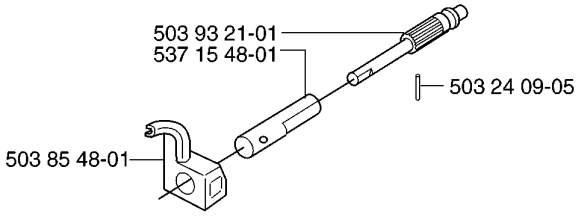

C 345e

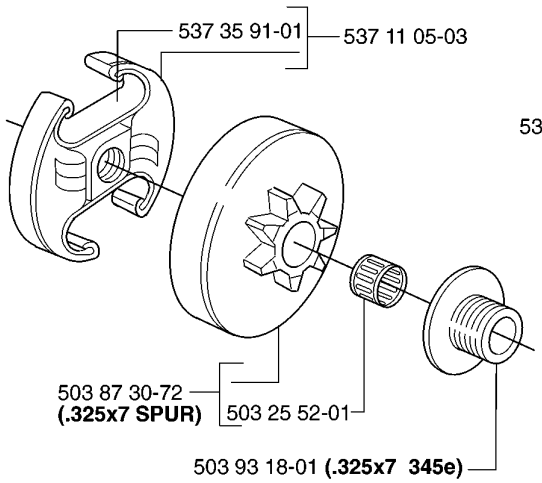

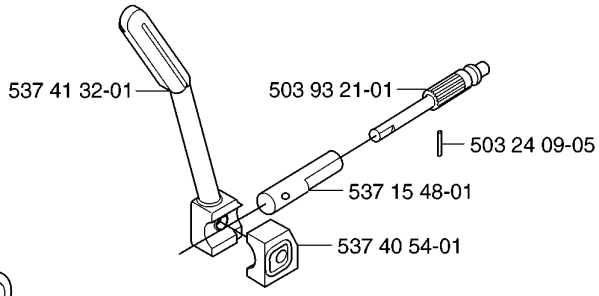

C 350

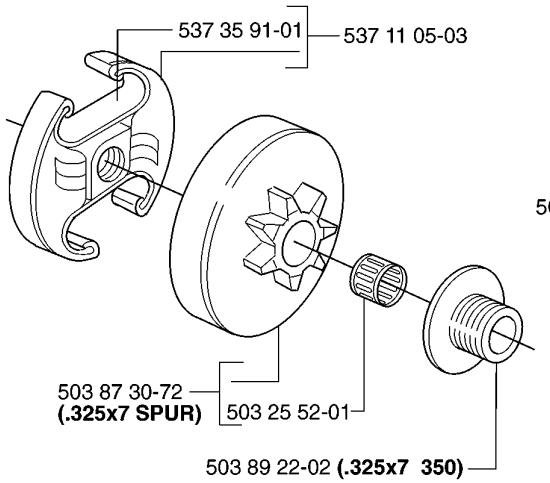

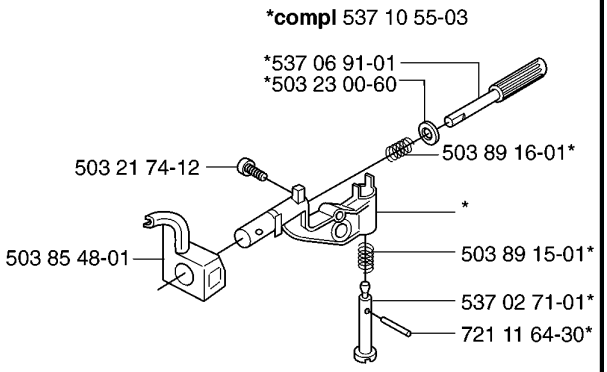

D ***compl** 503 91 05-01 **(340)**

*503 98 74-01

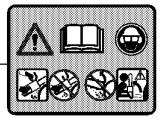

*503 20 34-25 **(x3)**

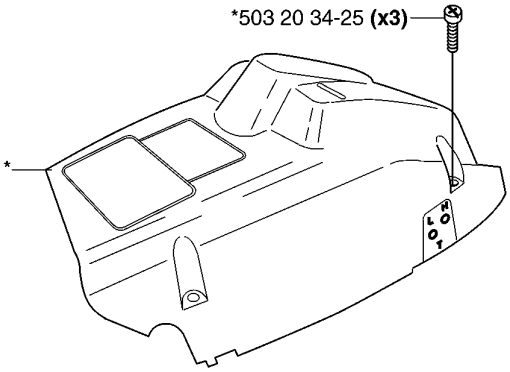

D ***compl** 537 42 20-01 **(340e, 345e)**

*503 98 74-01

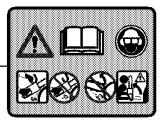

*503 20 34-25 **(x3)**

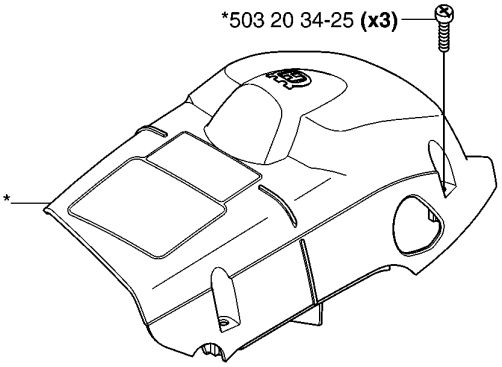

D ***compl** 537 42 19-01 **(350)**

*503 98 74-01

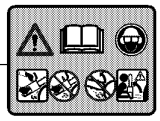

*503 20 34-25 **(x3)**

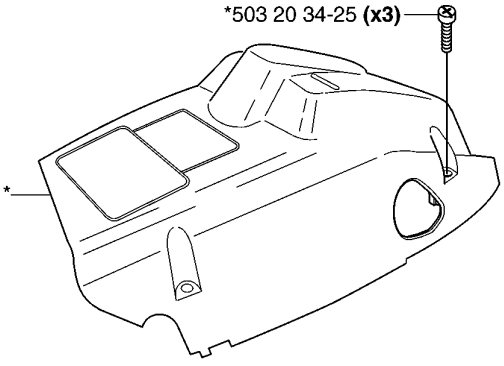

E

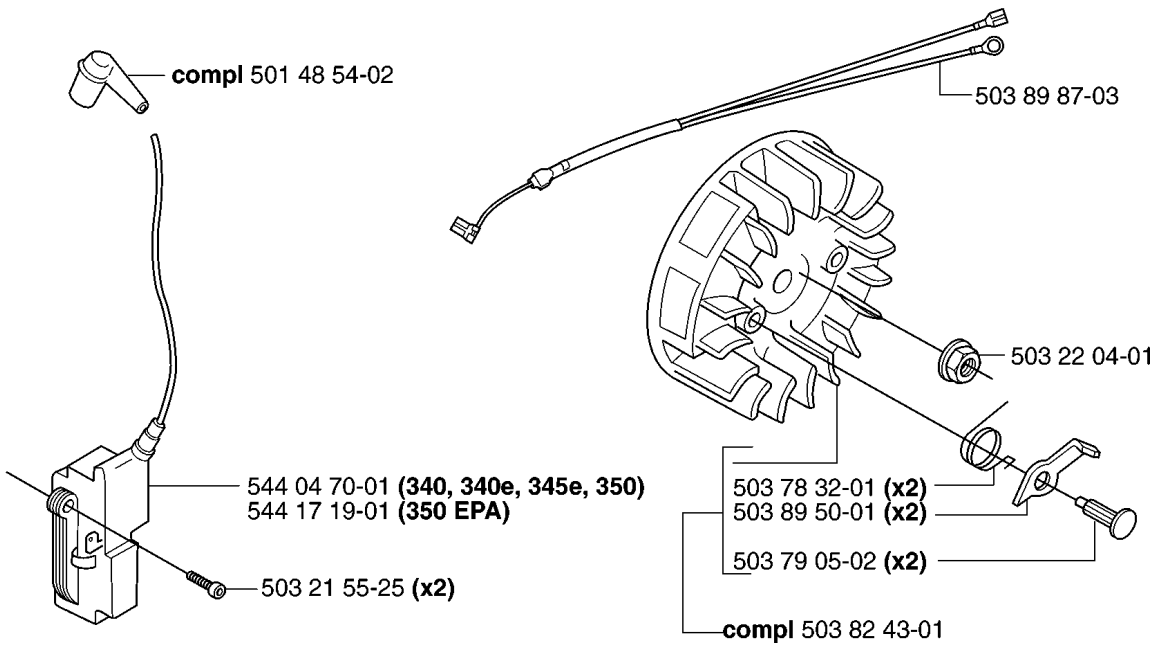
compl 501 48 54-02
503 89 87-03
503 22 04-01
544 04 70-01 (340, 340e, 345e, 350)
544 17 19-01 (350 EPA)
503 21 55-25 (x2)
503 78 32-01 (x2)
503 89 50-01 (x2)
503 79 05-02 (x2)
compl 503 82 43-01

F ***compl** 503 86 27-03 **(EU) 350**

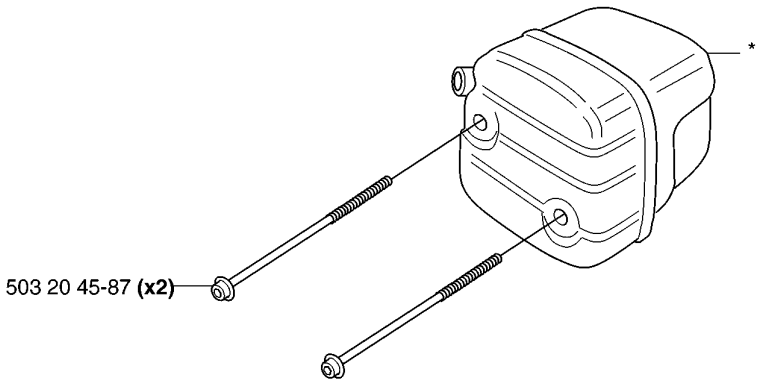

F ***compl** 503 87 96-02 **(FG) 340, 340e, 345**

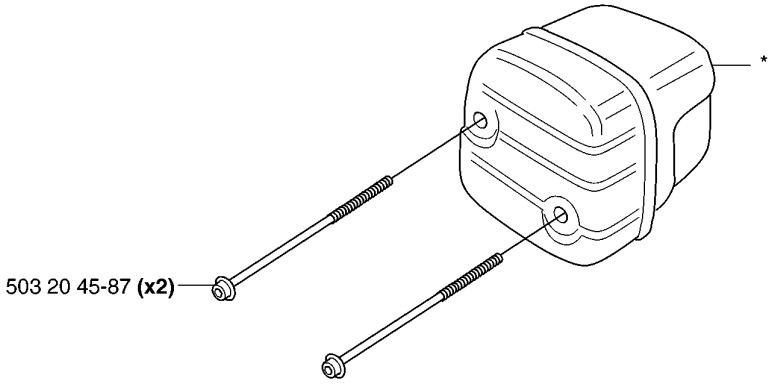

F ***compl** 503 86 28-03 **(DF) 340, 340e, 345, 350**

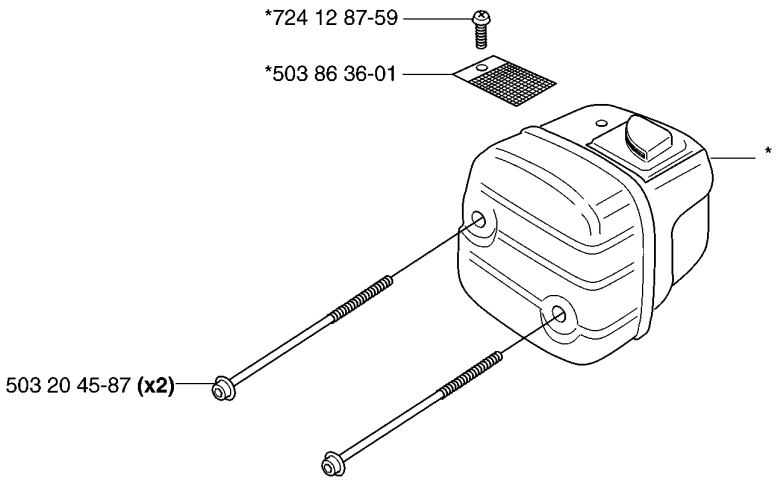

G 340

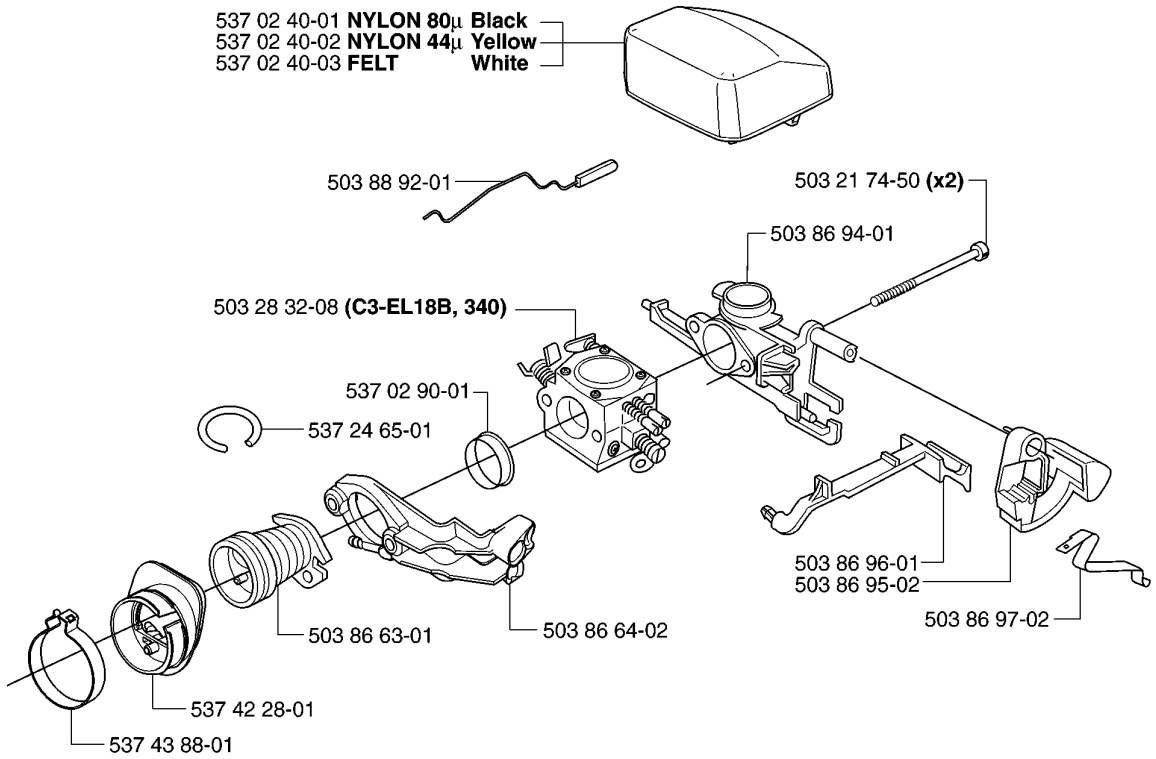

G 340e, 345e, 350

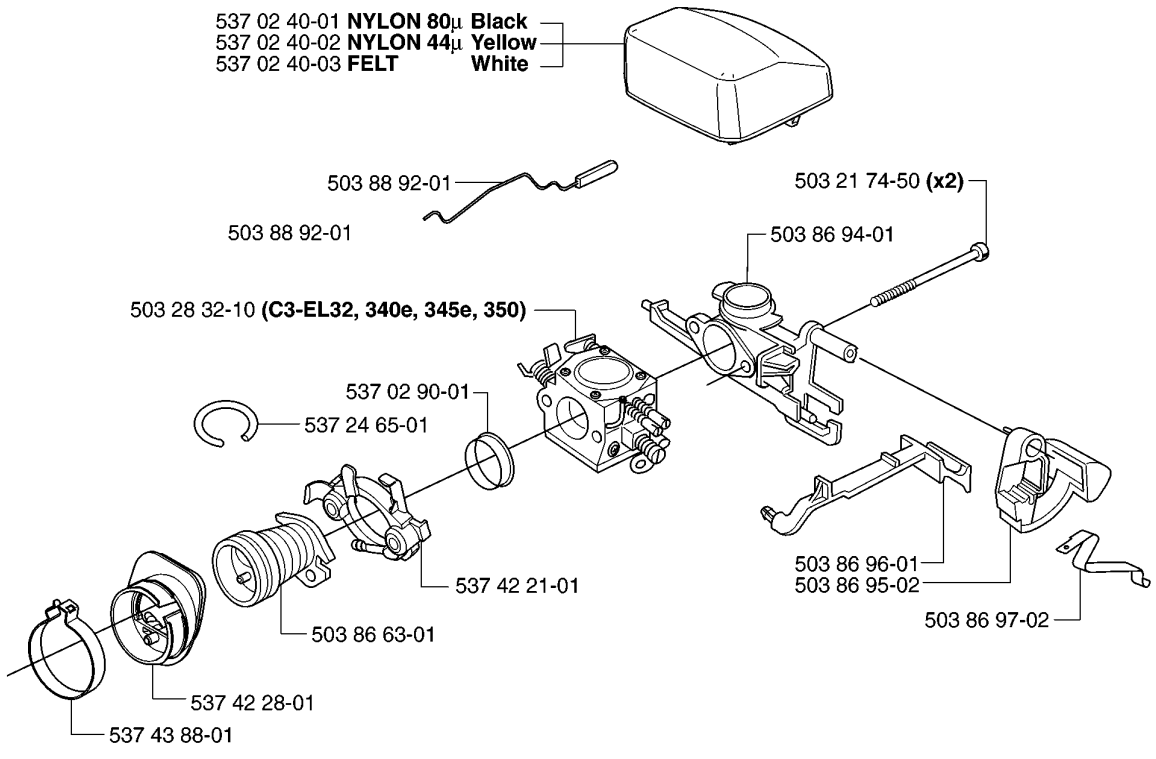

H

****compl** 537 25 30-02 **(350EPA)**
***compl** 503 86 99-03 **(350)**

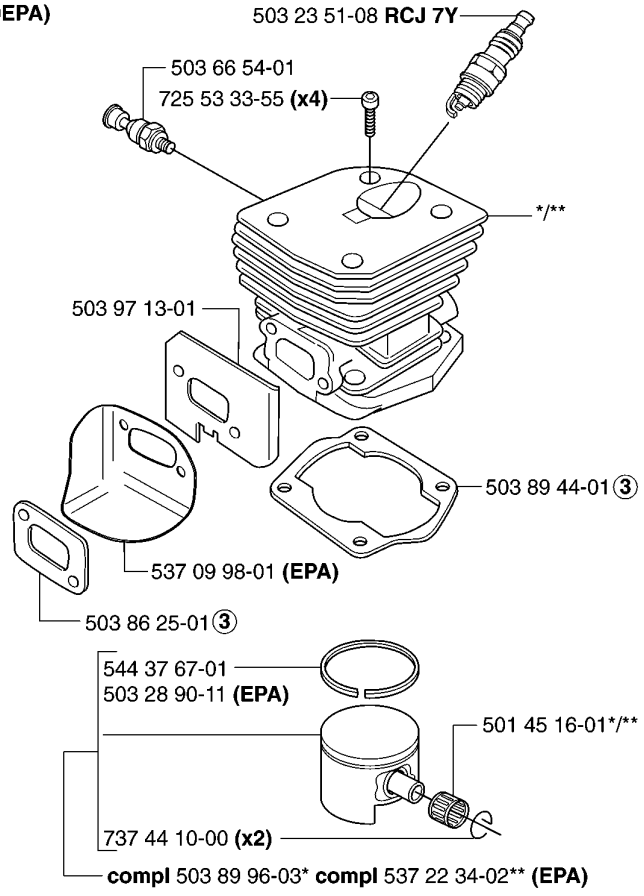

J ***compl** 503 85 80-71

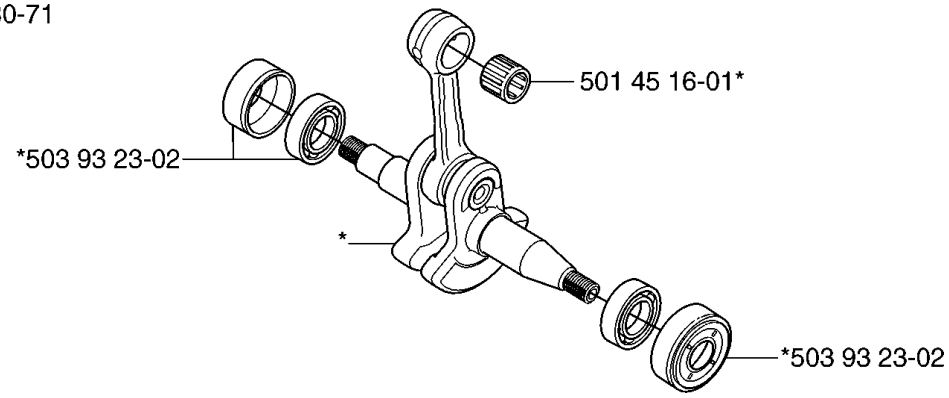

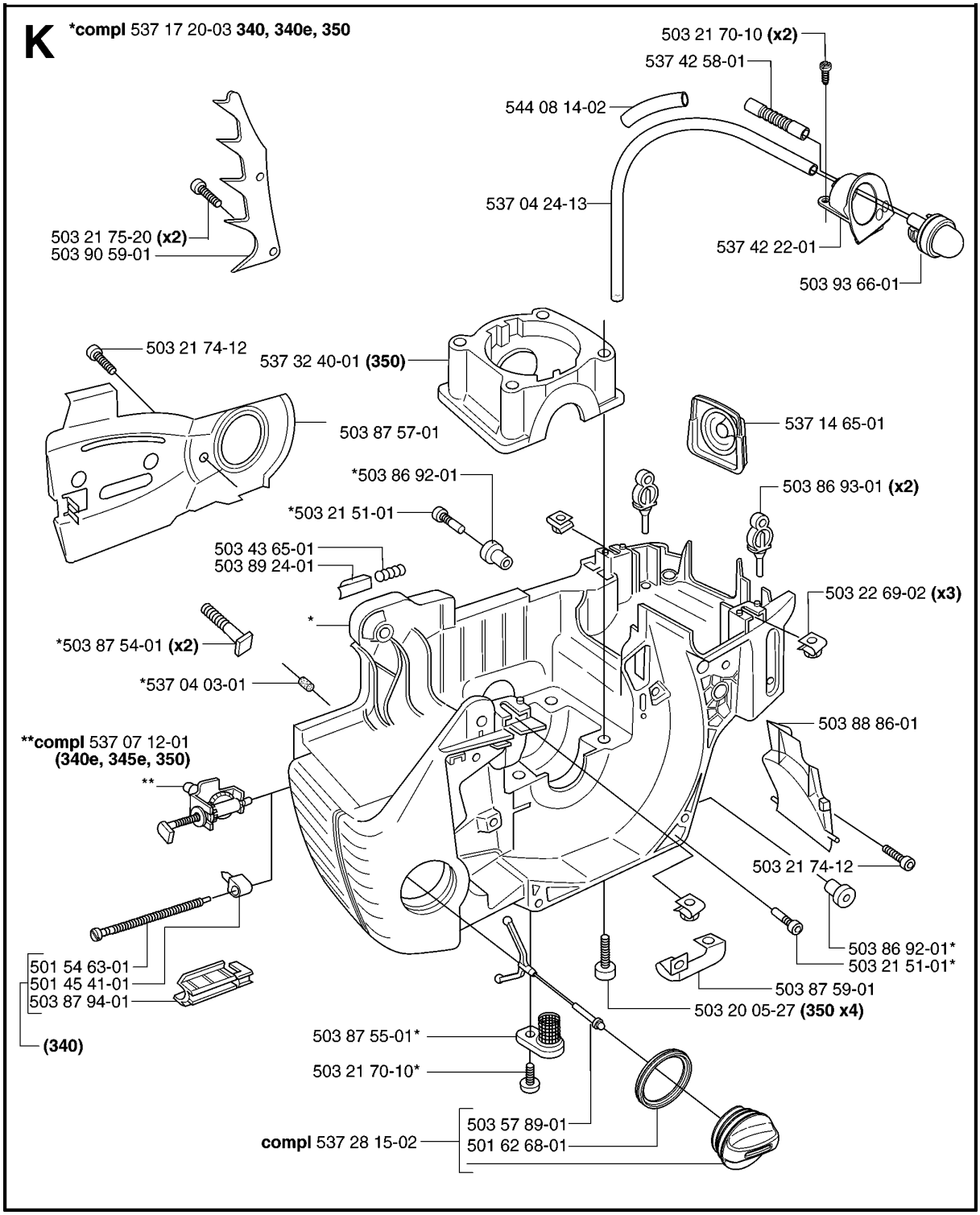
K
*compl 537 17 20-03 340, 340e, 350
503 21 70-10 (x2)
537 42 58-01
544 08 14-02
537 04 24-13
537 42 22-01
503 93 66-01
503 21 75-20 (x2)
503 90 59-01
503 21 74-12
537 32 40-01 (350)
503 87 57-01
537 14 65-01
*503 86 92-01
503 86 93-01 (x2)
*503 21 51-01
503 43 65-01
503 89 24-01
503 22 69-02 (x3)
*
*503 87 54-01 (x2)
*537 04 03-01
503 88 86-01
**compl 537 07 12-01
(340e, 345e, 350)
**
503 21 74-12
503 86 92-01*
503 21 51-01*
501 54 63-01
501 45 41-01
503 87 94-01
503 87 59-01
503 20 05-27 (350 x4)
(340)
503 87 55-01*
503 21 70-10*
503 57 89-01
compl 537 28 15-02
501 62 68-01

K ***compl** 544 33 46-01 **345e**

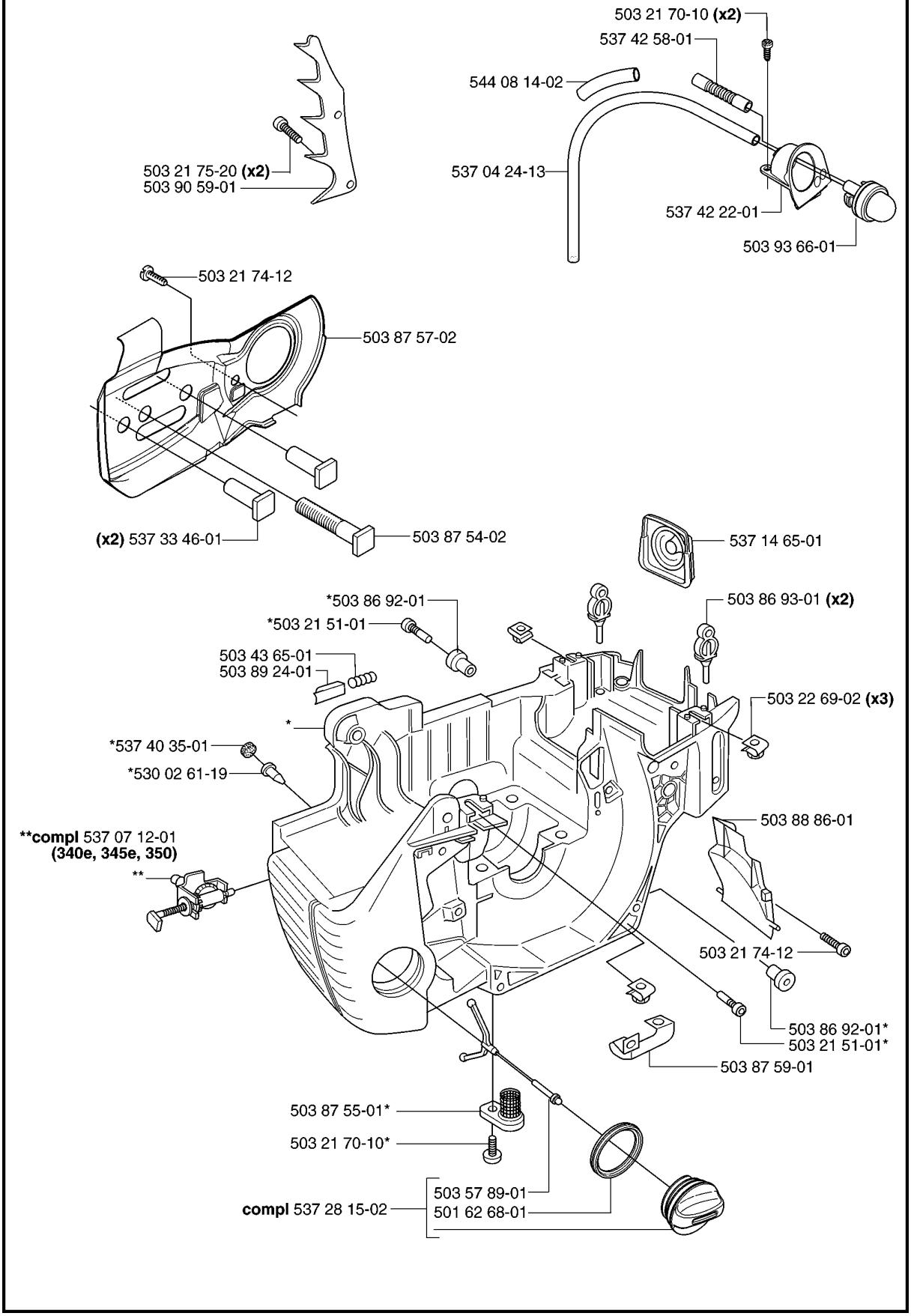

L ***compl** 503 86 37-03

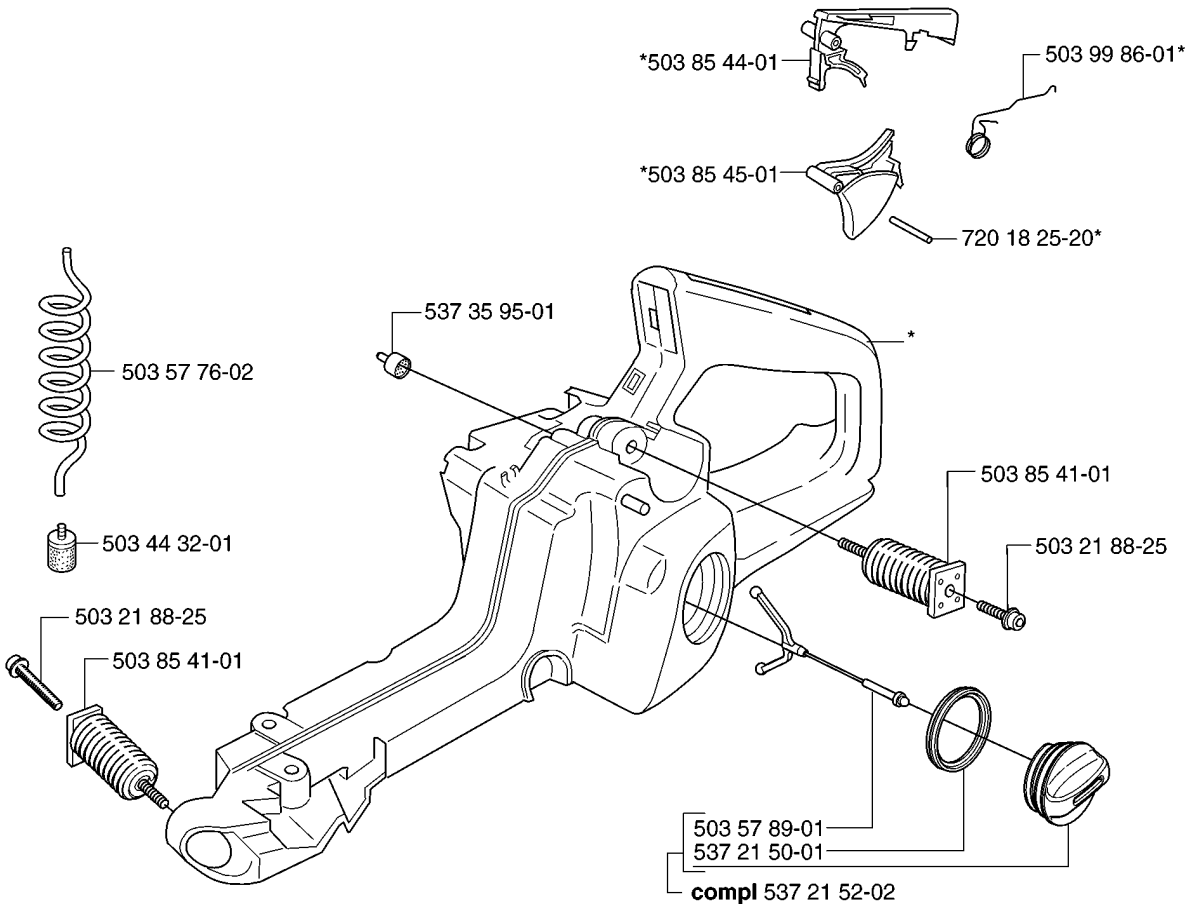

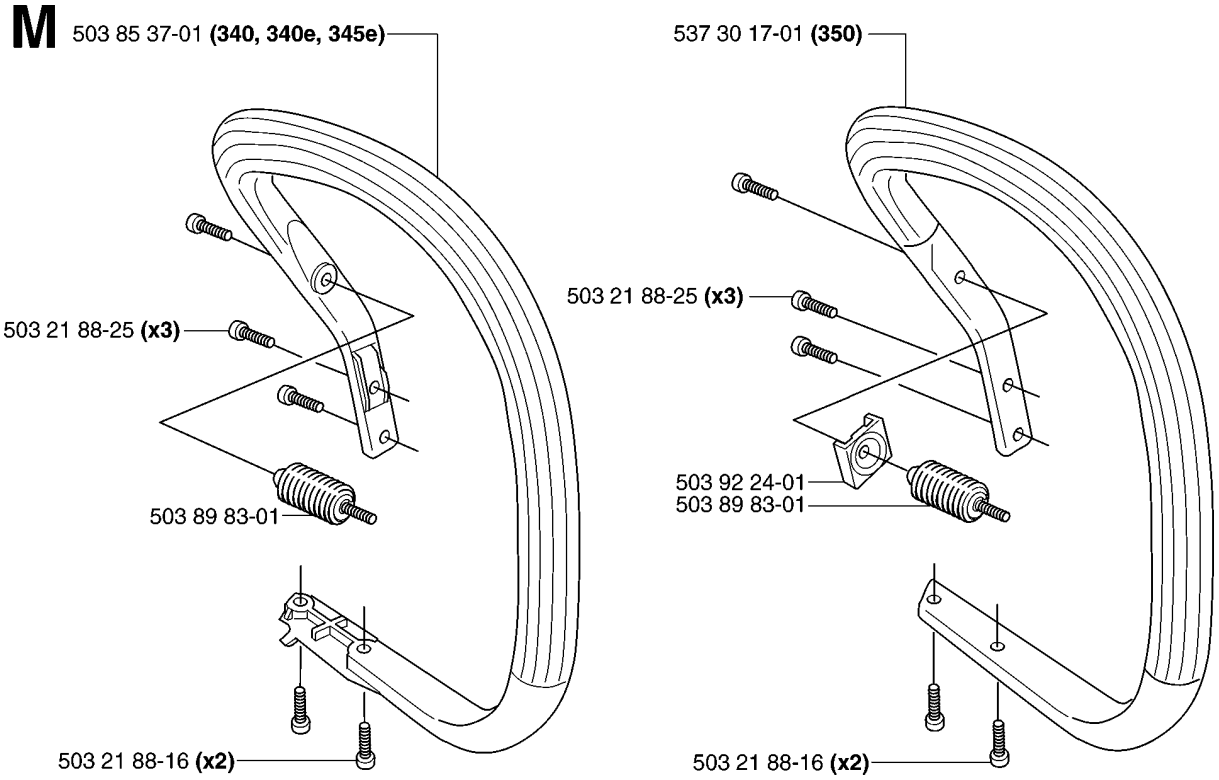
M
503 85 37-01 (340, 340e, 345e)
503 21 88-25 (x3)
503 89 83-01
503 21 88-16 (x2)
537 30 17-01 (350)
503 21 88-25 (x3)
503 92 24-01
503 89 83-01
503 21 88-16 (x2)

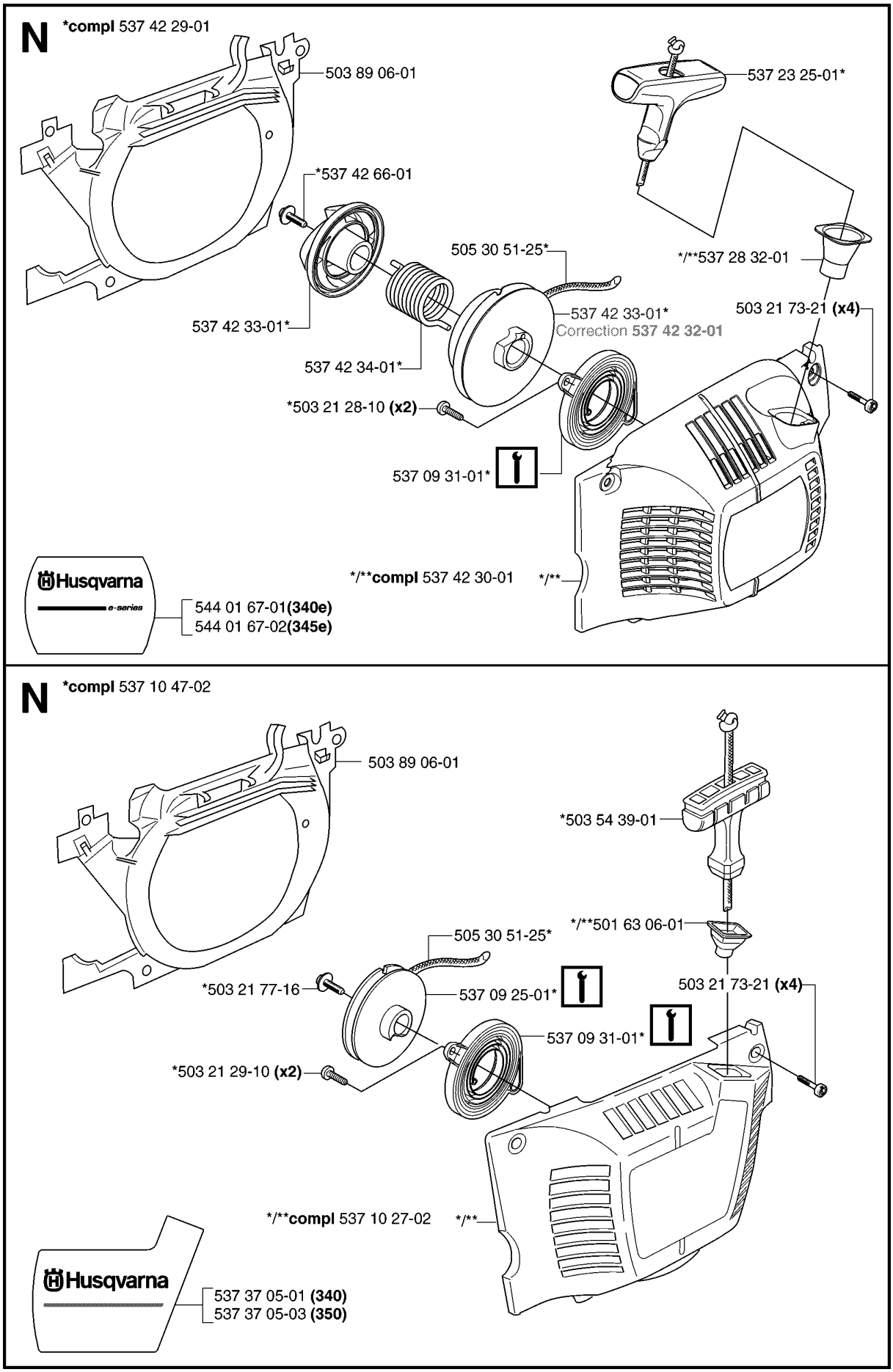
N
*compl 537 42 29-01
503 89 06-01
*537 42 66-01
537 42 33-01*
505 30 51-25*
537 42 34-01*
*503 21 28-10 (x2)
537 09 31-01*
537 23 25-01*
*/**537 28 32-01
503 21 73-21 (x4)
537 42 33-01*
Correction 537 42 32-01
*/**compl 537 42 30-01
*/**
Husqvarna
e-series
544 01 67-01(340e)
544 01 67-02(345e)
N
*compl 537 10 47-02
503 89 06-01
*503 54 39-01
*/**501 63 06-01
505 30 51-25*
*503 21 77-16
537 09 25-01*
503 21 73-21 (x4)
537 09 31-01*
*503 21 29-10 (x2)
*/**compl 537 10 27-02
*/**
Husqvarna
537 37 05-01 (340)
537 37 05-03 (350)

P ***compl** 503 28 32-08 **ZAMA C3-EL18B (340)**

ZAMA C3-EL18B

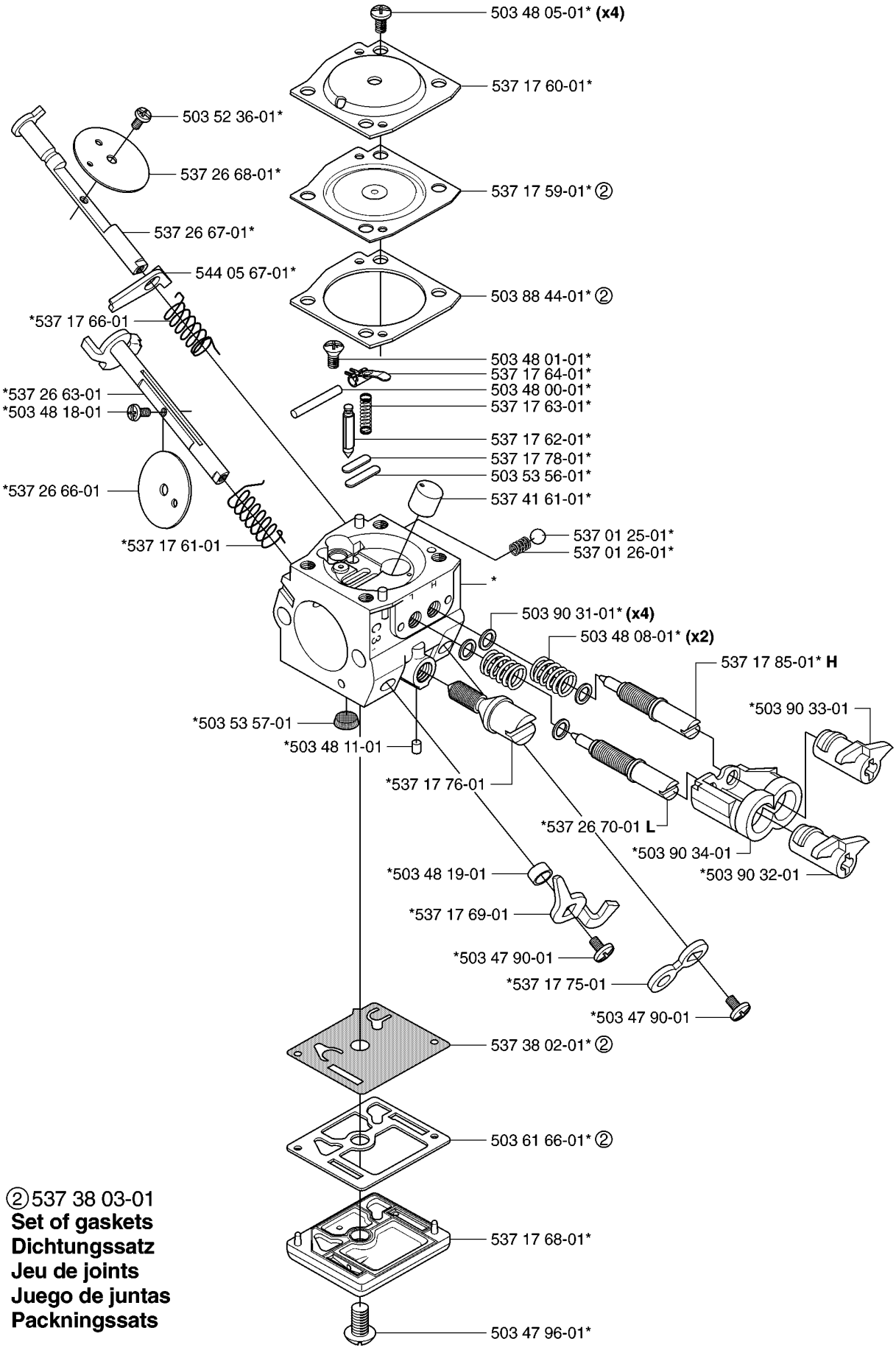

②537 38 03-01
Set of gaskets
Dichtungssatz
Jeu de joints
Juego de juntas
Packningssats

P ***compl** 503 28 32-08 **ZAMA C3-EL32 (340e, 345e, 350)**
Correction **503 28 32-10**

ZAMA C3-EL32

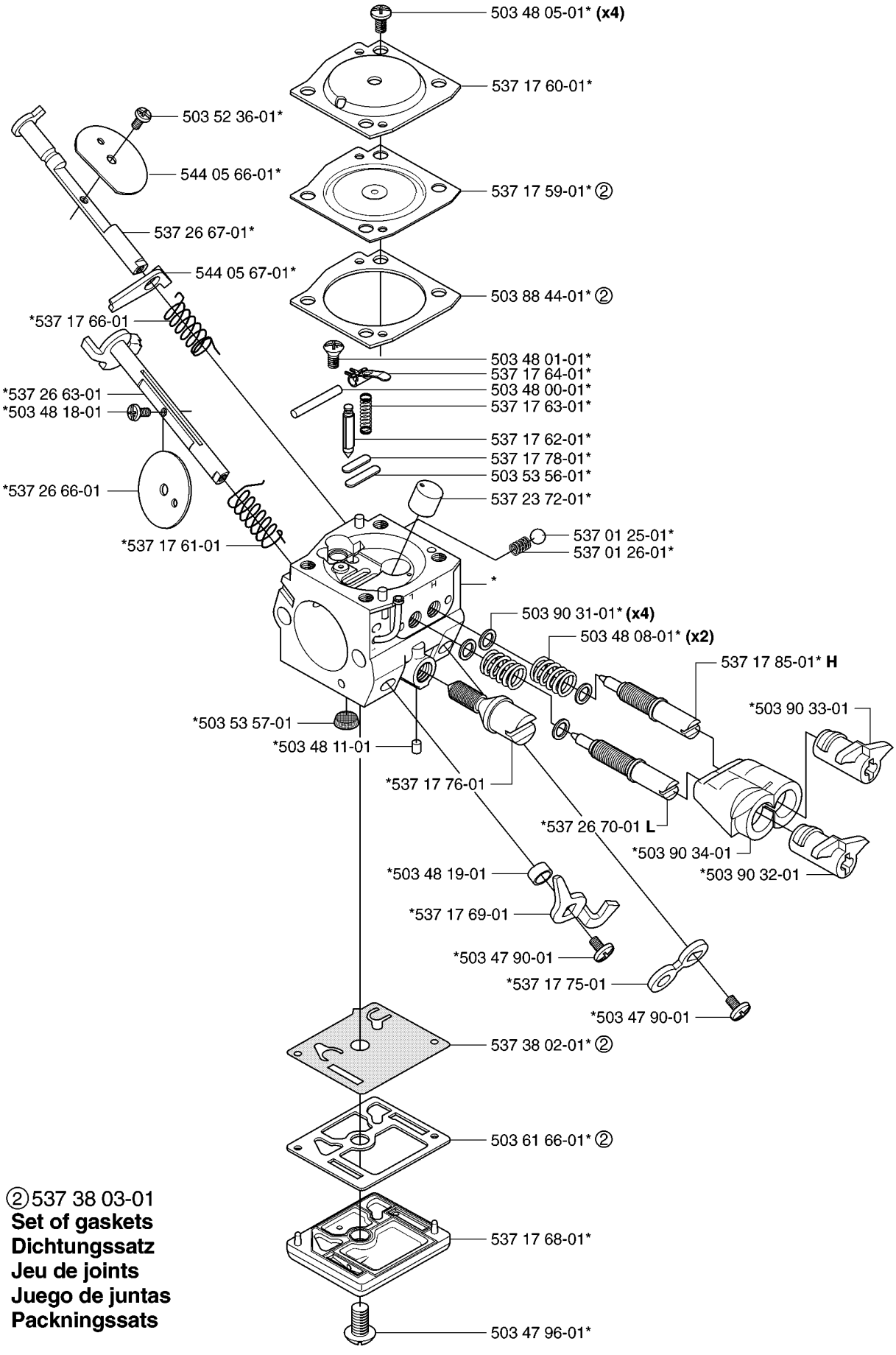

②537 38 03-01
Set of gaskets
Dichtungssatz
Jeu de joints
Juego de juntas
Packningssats

Q Tillbehör
Accessories
Zubehöre
Accessoires
Accesorios

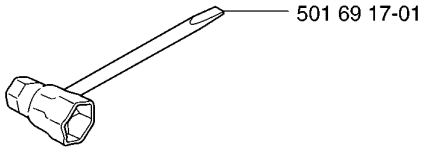

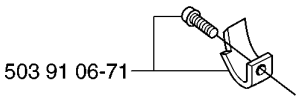

Winter kit
***compl** 537 42 29-01 **(340e, 345e)**
Correction 544 01 31-01

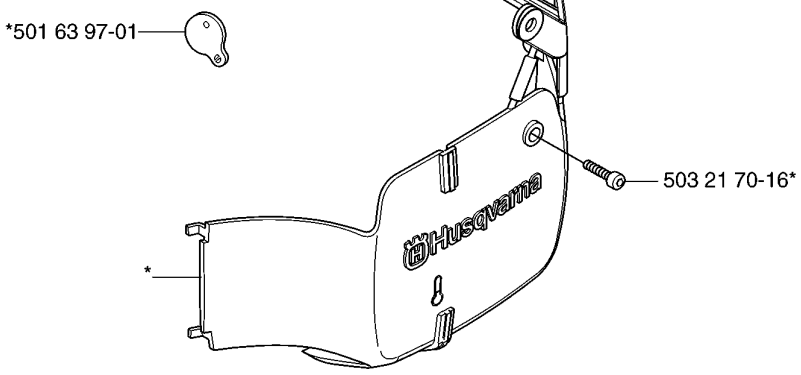

Winter kit
***compl** 537 04 28-02 **(340, 350)**

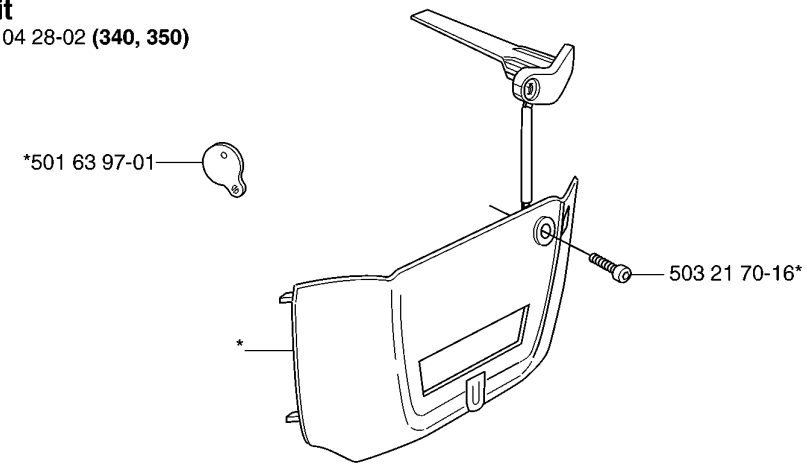

R **Up to 991499999**

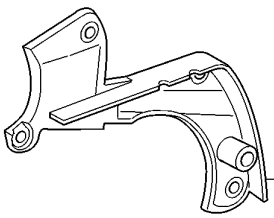

503 89 07-02

From 991500001 to 001400001

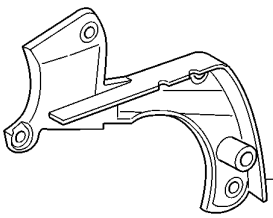

537 10 80-01

Up to 010604200 (340)
Up to 010602850 (345)
Up to 010702450 (350)

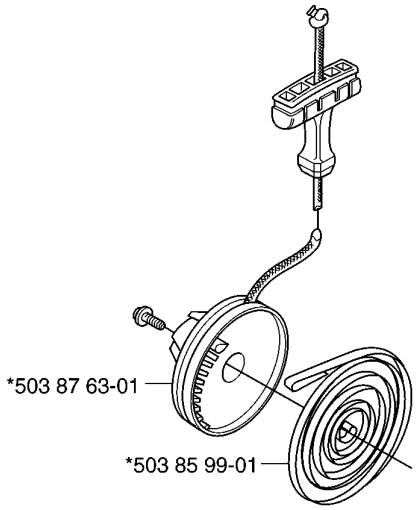

Up to 052299999 (345)



Up to 000601101 (340, 345)

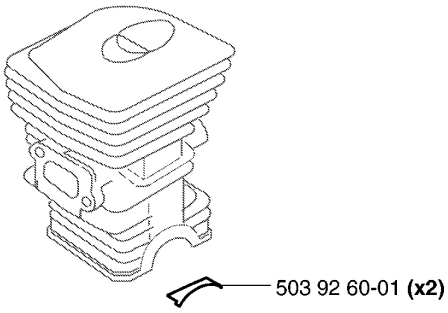

Up to 030103001
Only EPA (350)

***compl** 503 89 99-71 **(350)**

