Husqvarna
340 (2005-05)

Rozkres je dokumentace výrobce (© příslušný výrobce) a slouží k identifikaci dílů. Pro výběr dílu se vždy řiďte katalogovým číslem.

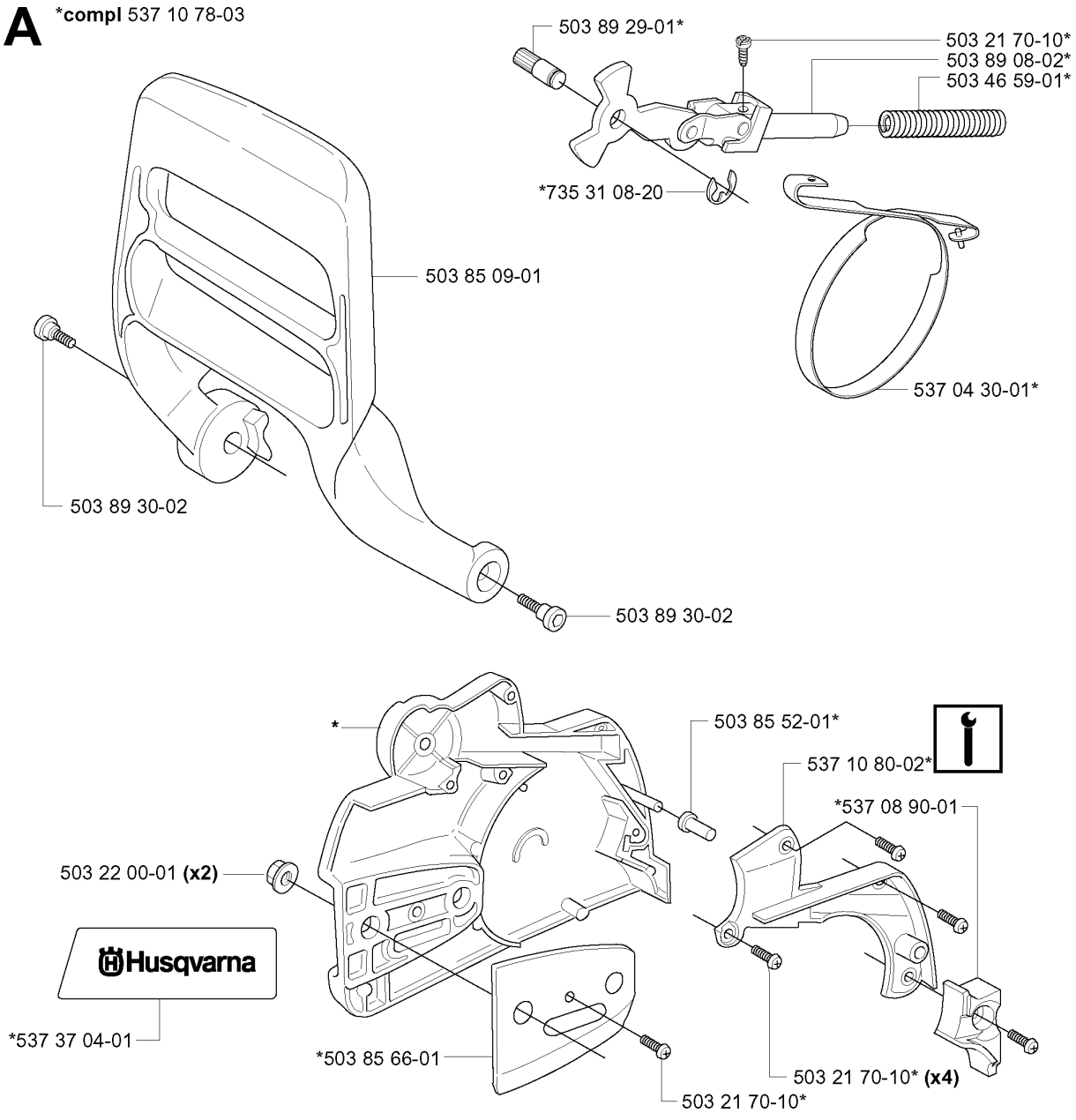
A
*compl 537 10 78-03
503 89 29-01*
503 21 70-10*
503 89 08-02*
503 46 59-01*
*735 31 08-20
503 85 09-01
537 04 30-01*
503 89 30-02
503 89 30-02
*
503 85 52-01*
537 10 80-02*
*537 08 90-01
503 22 00-01 (x2)
Husqvarna
*537 37 04-01
*503 85 66-01
503 21 70-10* (x4)
503 21 70-10*

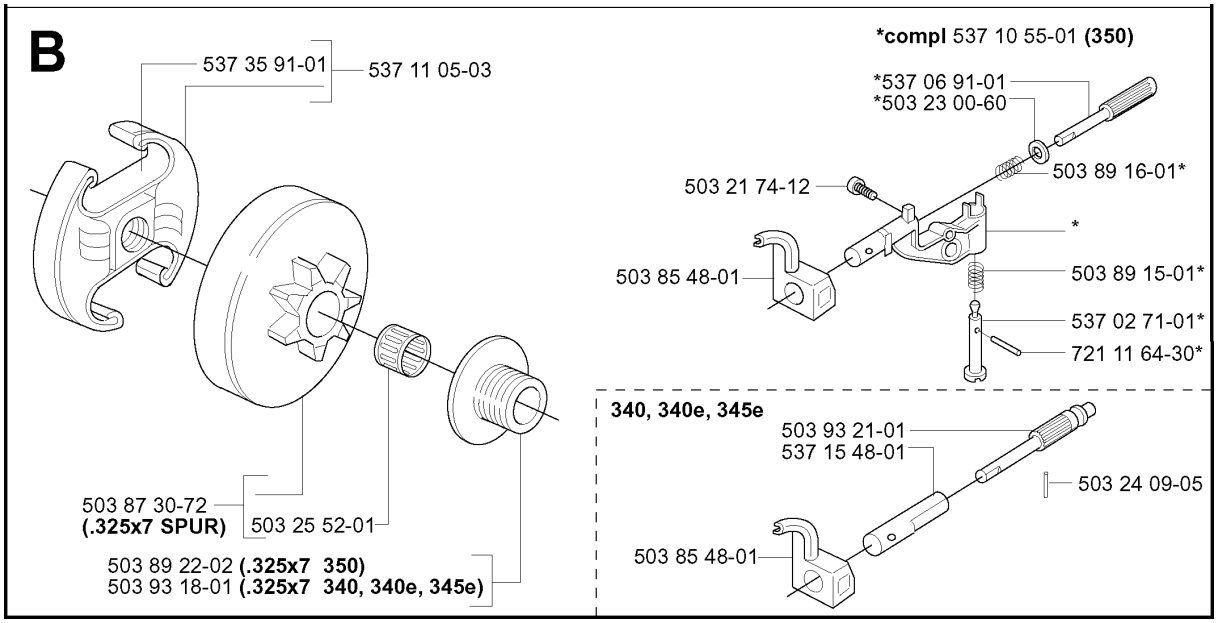
B
537 35 91-01
537 11 05-03
503 87 30-72
(.325x7 SPUR)
503 25 52-01
503 89 22-02 (.325x7 350)
503 93 18-01 (.325x7 340, 340e, 345e)
*compl 537 10 55-01 (350)
*537 06 91-01
*503 23 00-60
503 89 16-01*
503 21 74-12
*
503 85 48-01
503 89 15-01*
537 02 71-01*
721 11 64-30*
340, 340e, 345e
503 93 21-01
537 15 48-01
503 24 09-05
503 85 48-01

C ***compl** 503 91 05-01 **(340)**

*503 98 74-01

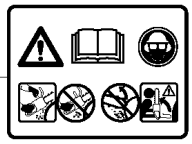

*503 20 34-25 **(x3)**

*

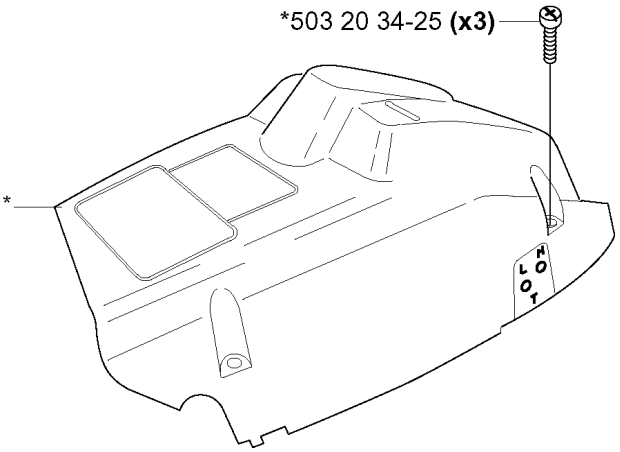

C ***compl 537 42 20-01 (340e, 345e)**

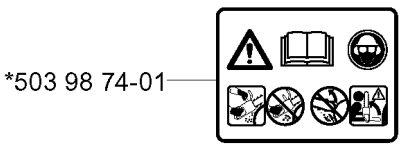

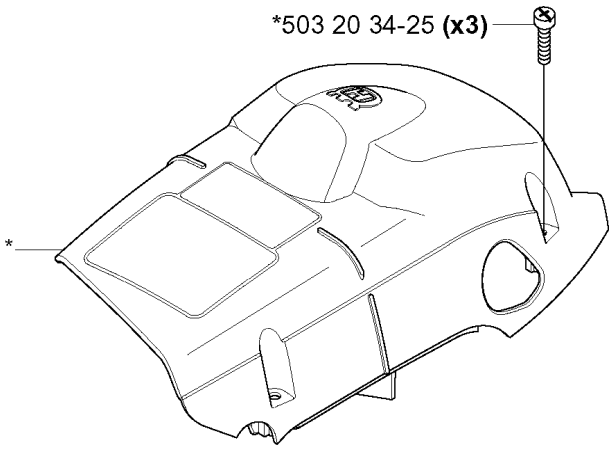

C ***compl** 537 42 19-01 **(350)**

*503 98 74-01

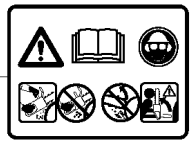

*503 20 34-25 **(x3)**

*

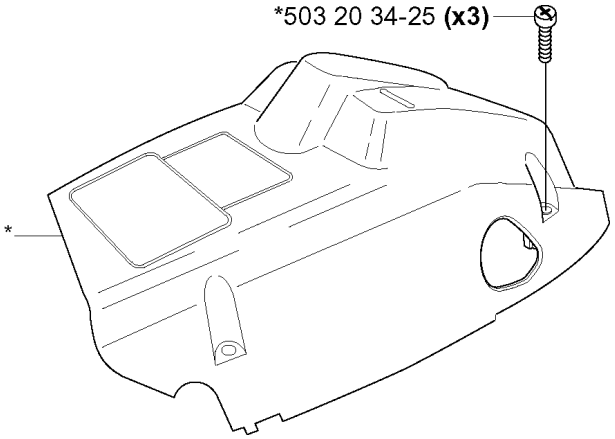

D

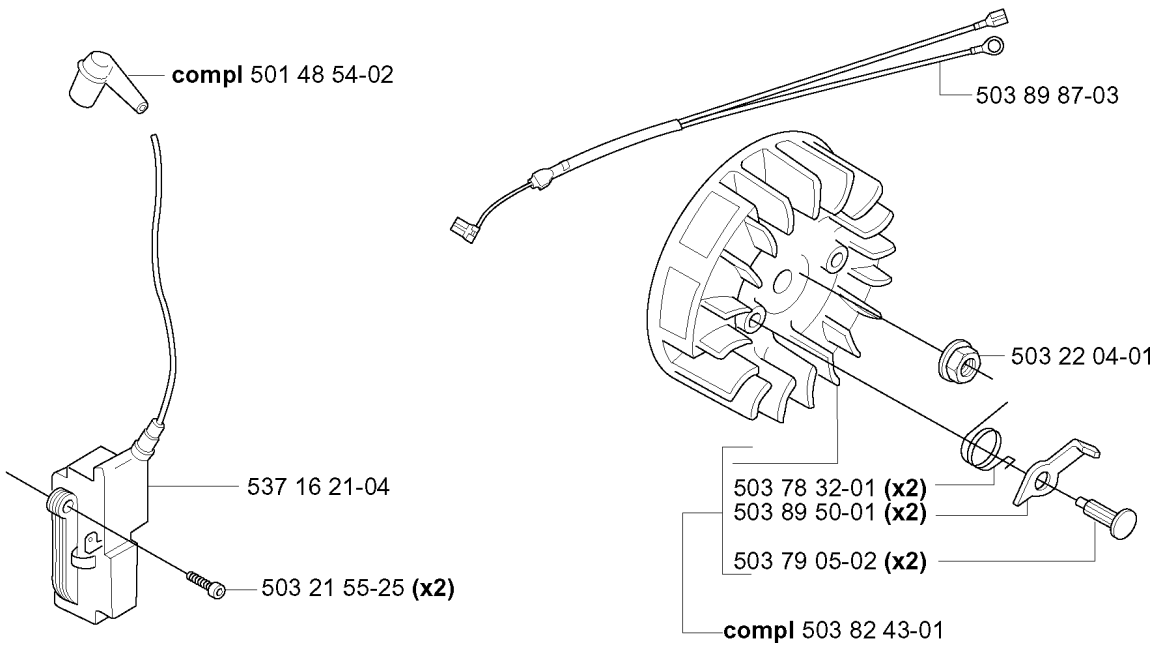
compl 501 48 54-02
503 89 87-03
503 22 04-01
537 16 21-04
503 78 32-01 (x2)
503 89 50-01 (x2)
503 79 05-02 (x2)
503 21 55-25 (x2)
compl 503 82 43-01

E

***compl** 503 86 27-03 **(EU) 350**

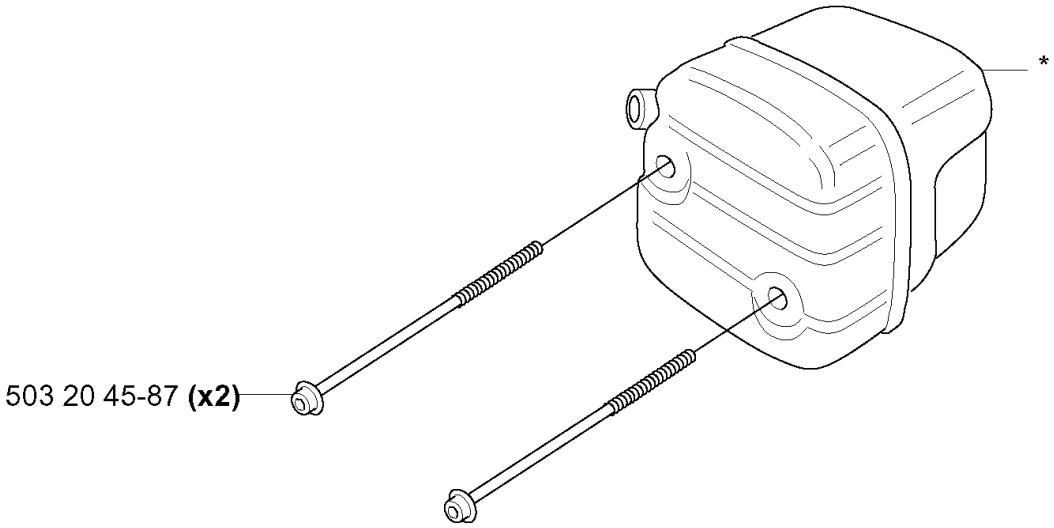

E

***compl** 503 87 96-02 **(FG) 340, 340e, 345**

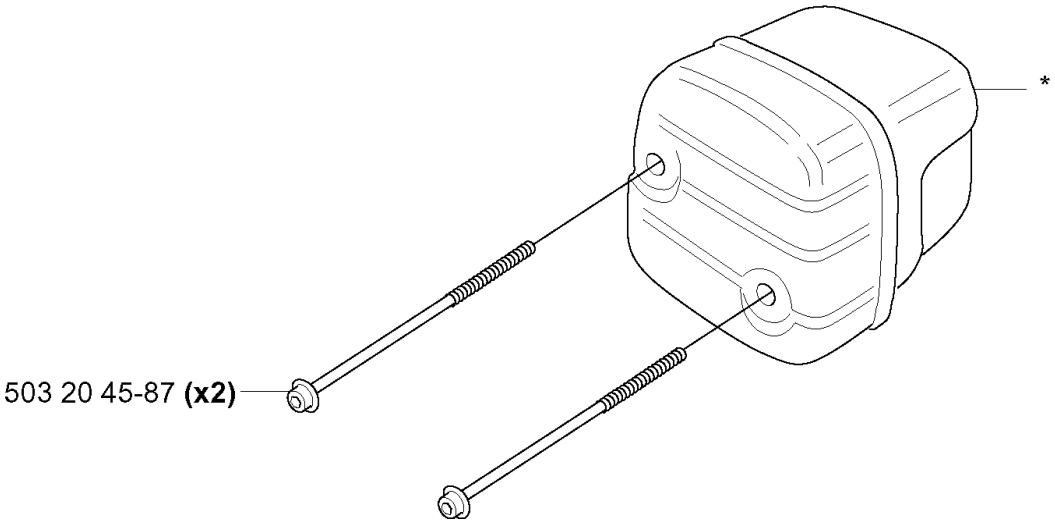

E

***compl** 503 86 28-03 **(DF) 340, 340e, 345, 350**

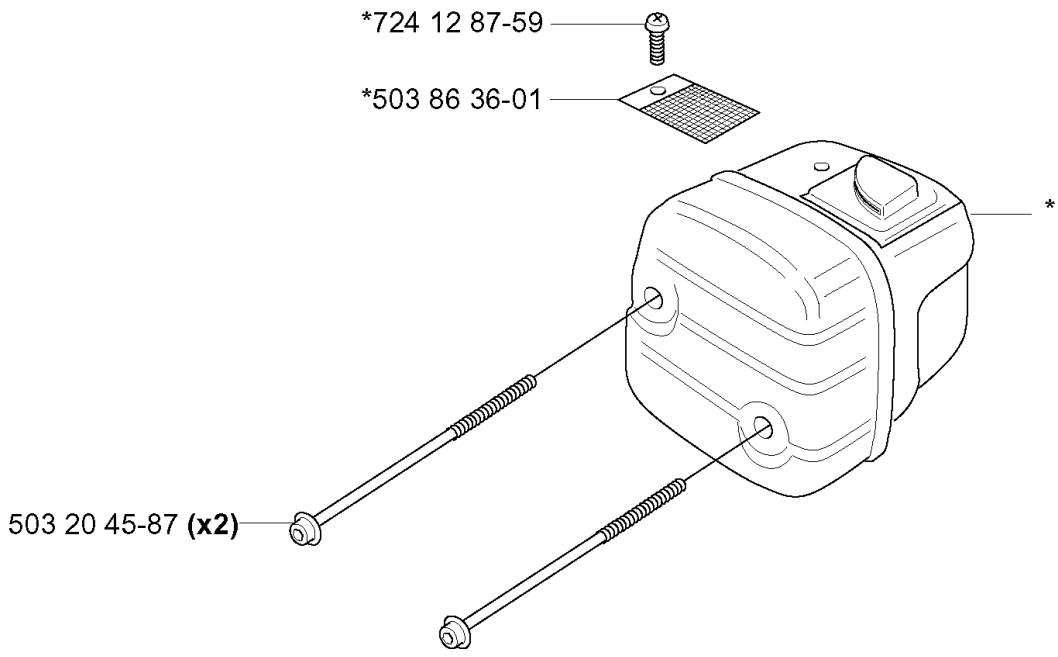

F **340**

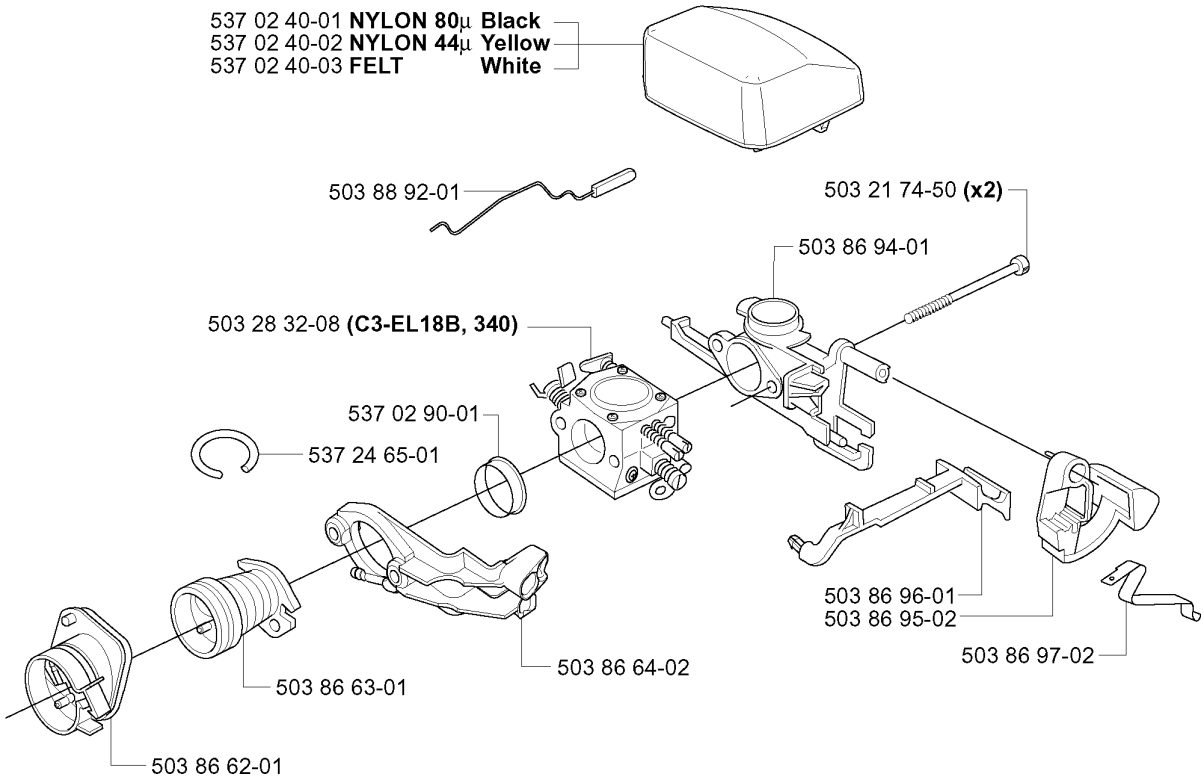
537 02 40-01 **NYLON 80µ Black**
537 02 40-02 **NYLON 44µ Yellow**
537 02 40-03 **FELT White**
503 88 92-01
503 21 74-50 **(x2)**
503 86 94-01
503 28 32-08 **(C3-EL18B, 340)**
537 02 90-01
537 24 65-01
503 86 96-01
503 86 95-02
503 86 97-02
503 86 64-02
503 86 63-01
503 86 62-01

F **340e, 345e, 350**

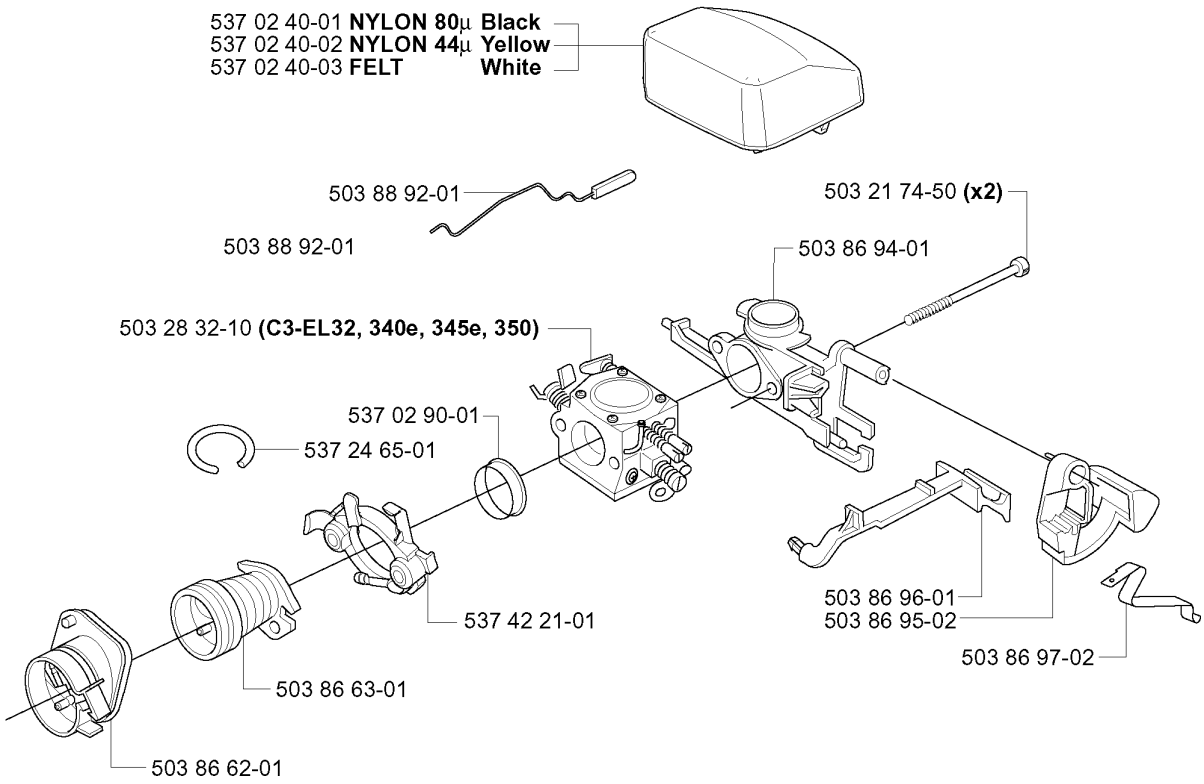

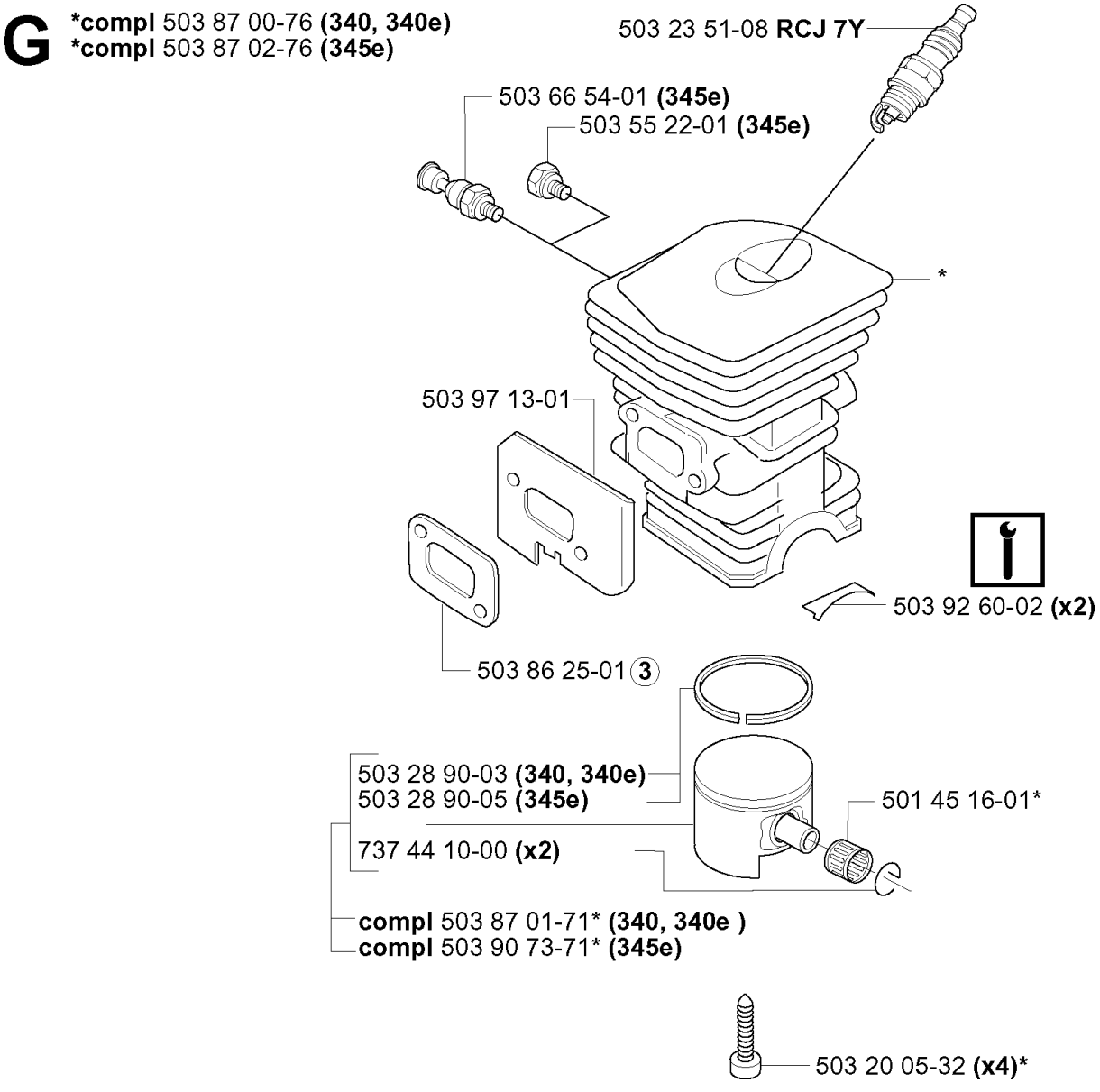
G
*compl 503 87 00-76 (340, 340e)
*compl 503 87 02-76 (345e)
503 23 51-08 RCJ 7Y
503 66 54-01 (345e)
503 55 22-01 (345e)
*
503 97 13-01
503 92 60-02 (x2)
503 86 25-01 3
503 28 90-03 (340, 340e)
503 28 90-05 (345e)
501 45 16-01*
737 44 10-00 (x2)
compl 503 87 01-71* (340, 340e)
compl 503 90 73-71* (345e)
503 20 05-32 (x4)*

G ****compl** 537 25 30-02 **(350EPA)**
***compl** 503 86 99-71 **(350)**

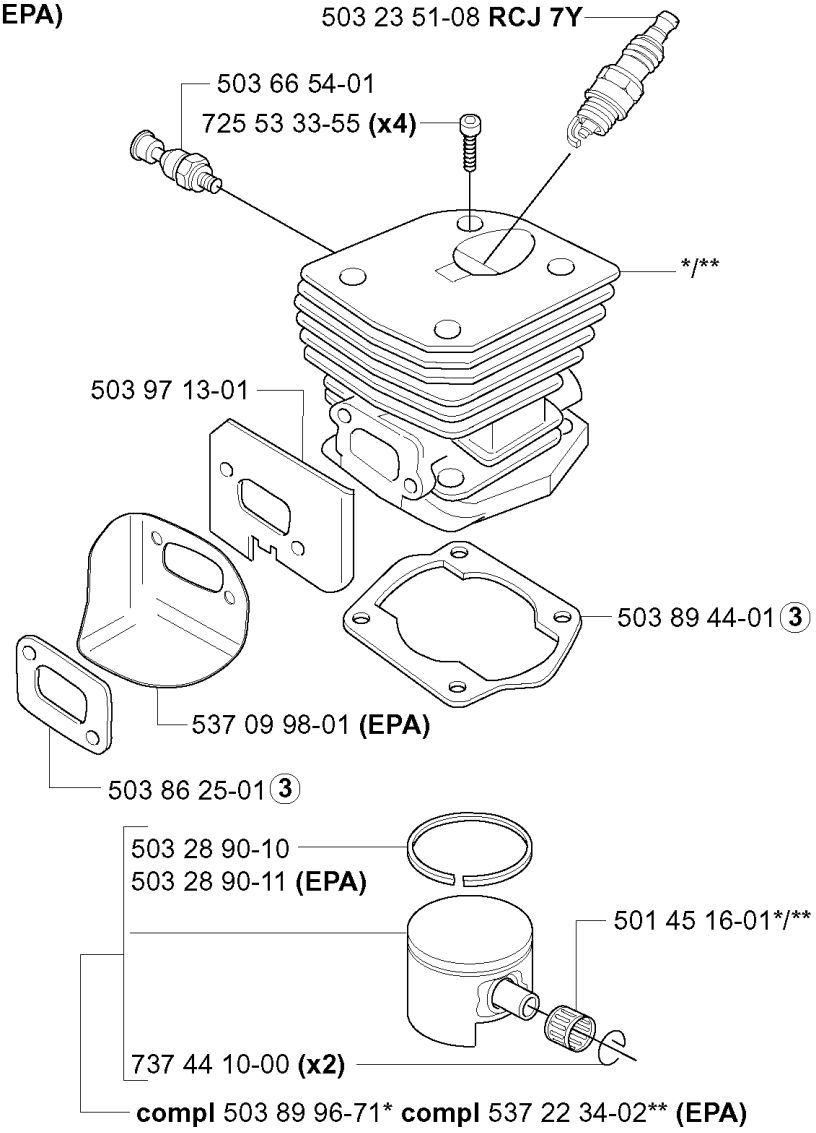

H ***compl** 503 85 80-71

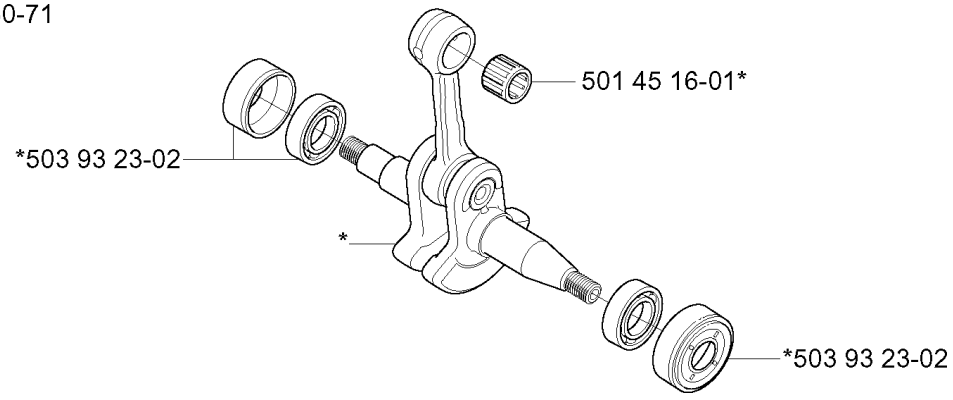

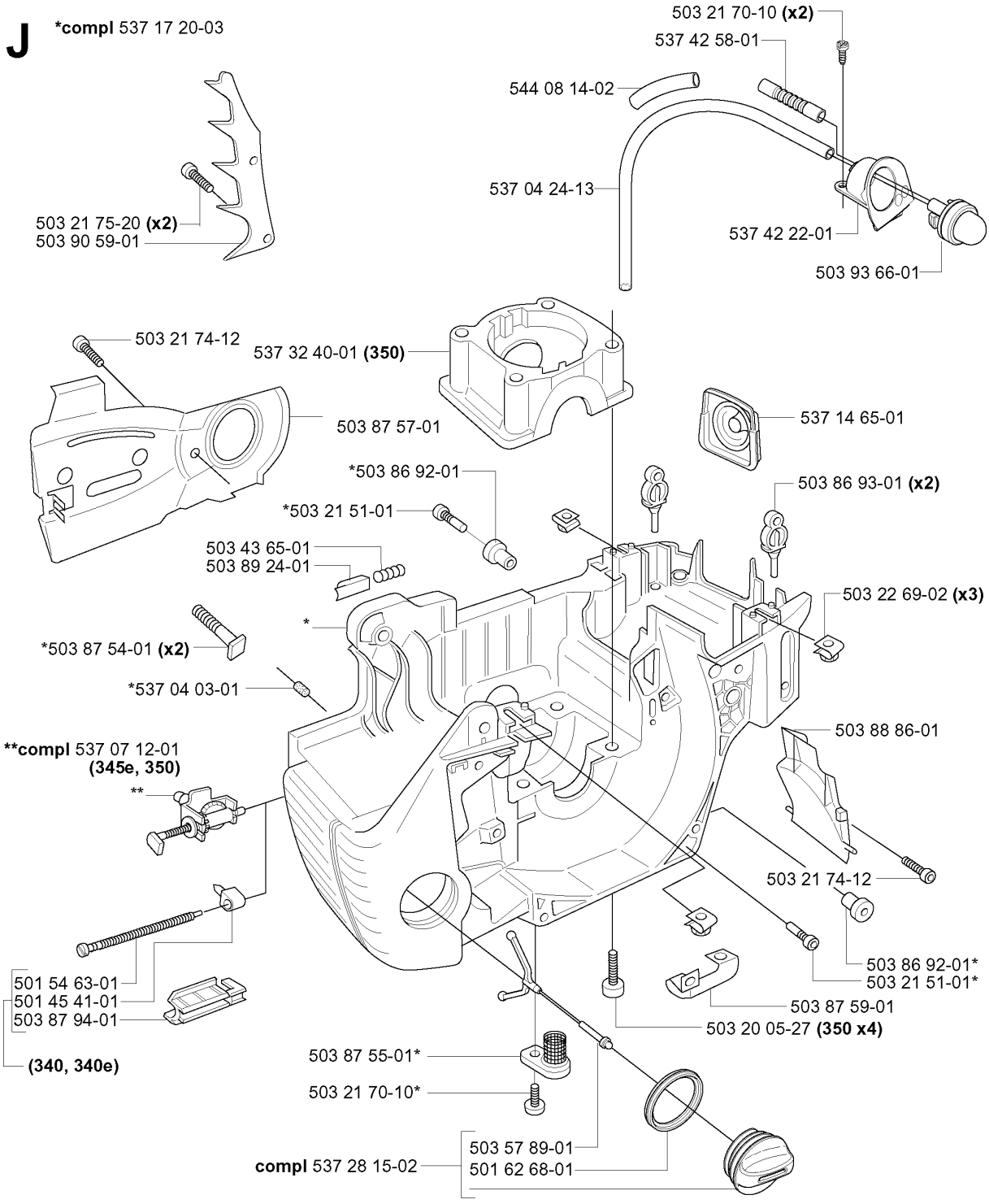
J
*compl 537 17 20-03
503 21 70-10 (x2)
537 42 58-01
544 08 14-02
537 04 24-13
537 42 22-01
503 93 66-01
503 21 75-20 (x2)
503 90 59-01
503 21 74-12
537 32 40-01 (350)
503 87 57-01
537 14 65-01
*503 86 92-01
*503 21 51-01
503 86 93-01 (x2)
503 43 65-01
503 89 24-01
503 22 69-02 (x3)
*
*503 87 54-01 (x2)
*537 04 03-01
503 88 86-01
**compl 537 07 12-01
(345e, 350)
**
503 21 74-12
503 86 92-01*
503 21 51-01*
501 54 63-01
501 45 41-01
503 87 94-01
(340, 340e)
503 87 59-01
503 20 05-27 (350 x4)
503 87 55-01*
503 21 70-10*
503 57 89-01
compl 537 28 15-02
501 62 68-01

K ***compl** 503 86 37-03

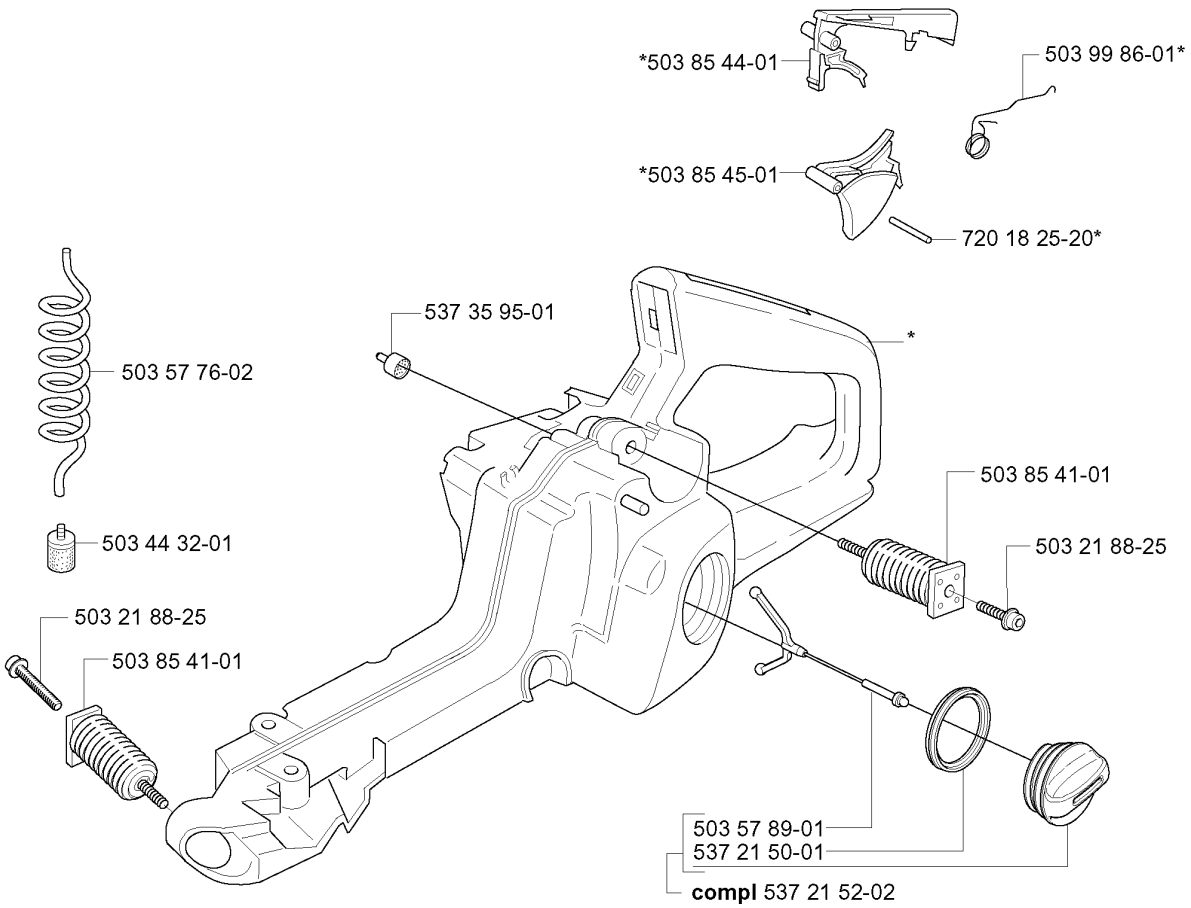

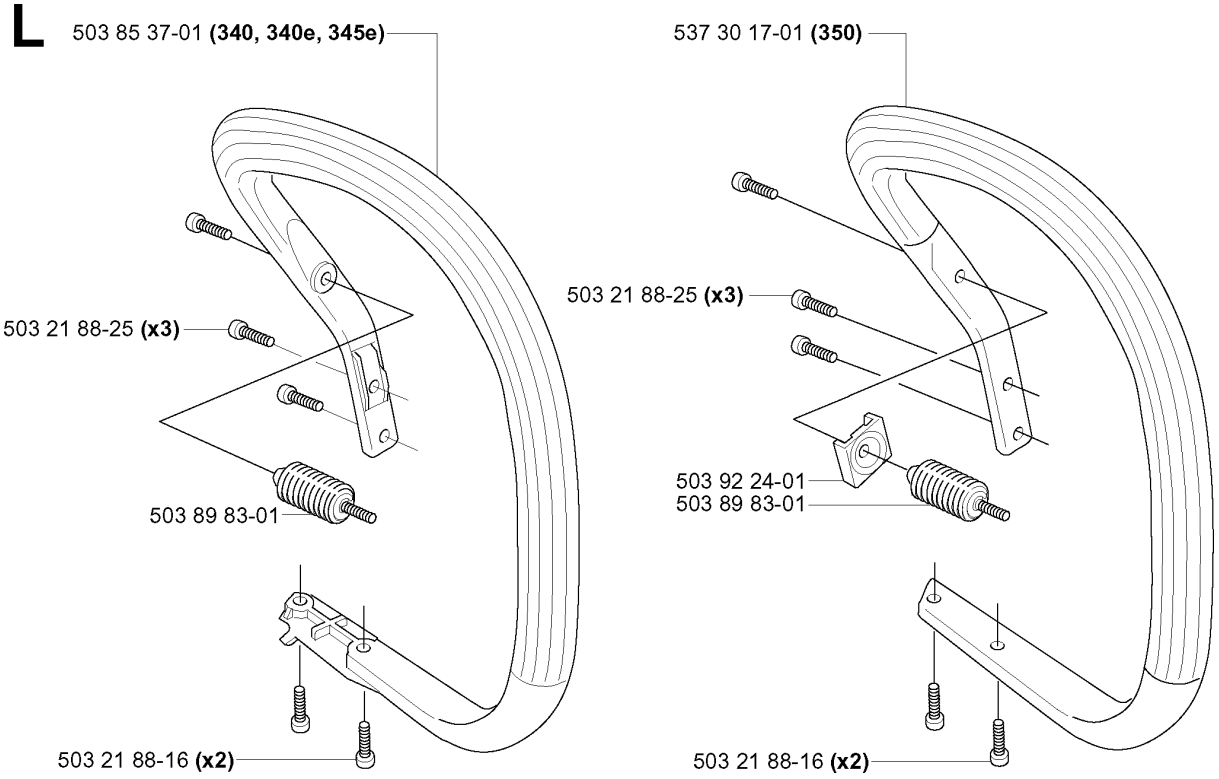
L
503 85 37-01 (340, 340e, 345e)
503 21 88-25 (x3)
503 89 83-01
503 21 88-16 (x2)
537 30 17-01 (350)
503 21 88-25 (x3)
503 92 24-01
503 89 83-01
503 21 88-16 (x2)

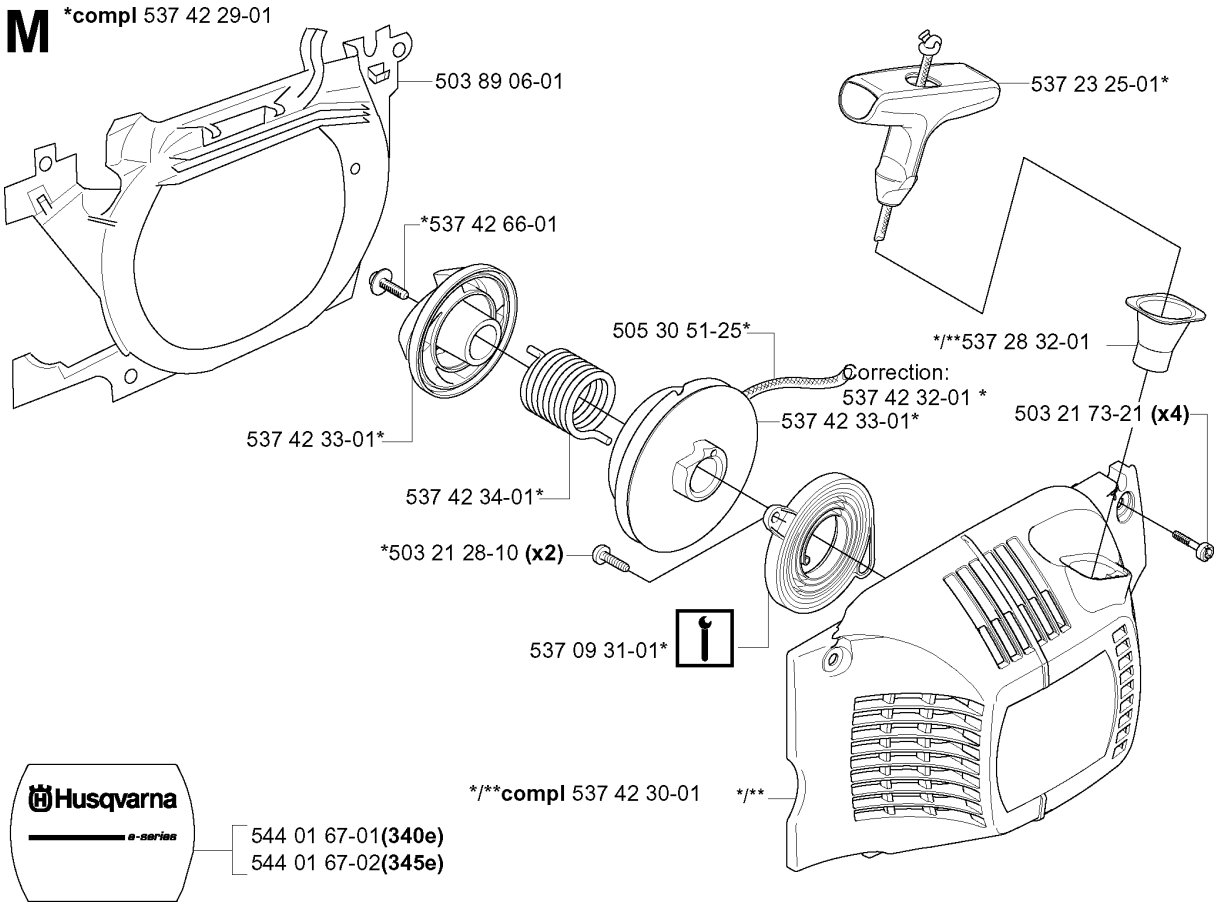
M
*compl 537 42 29-01
503 89 06-01
537 23 25-01*
*537 42 66-01
505 30 51-25*
*/**537 28 32-01
Correction:
537 42 32-01 *
537 42 33-01*
503 21 73-21 (x4)
537 42 33-01*
537 42 34-01*
*503 21 28-10 (x2)
537 09 31-01*
Husqvarna
e-series
544 01 67-01(340e)
544 01 67-02(345e)
*/**compl 537 42 30-01
*/**

M ***compl** 537 10 47-02

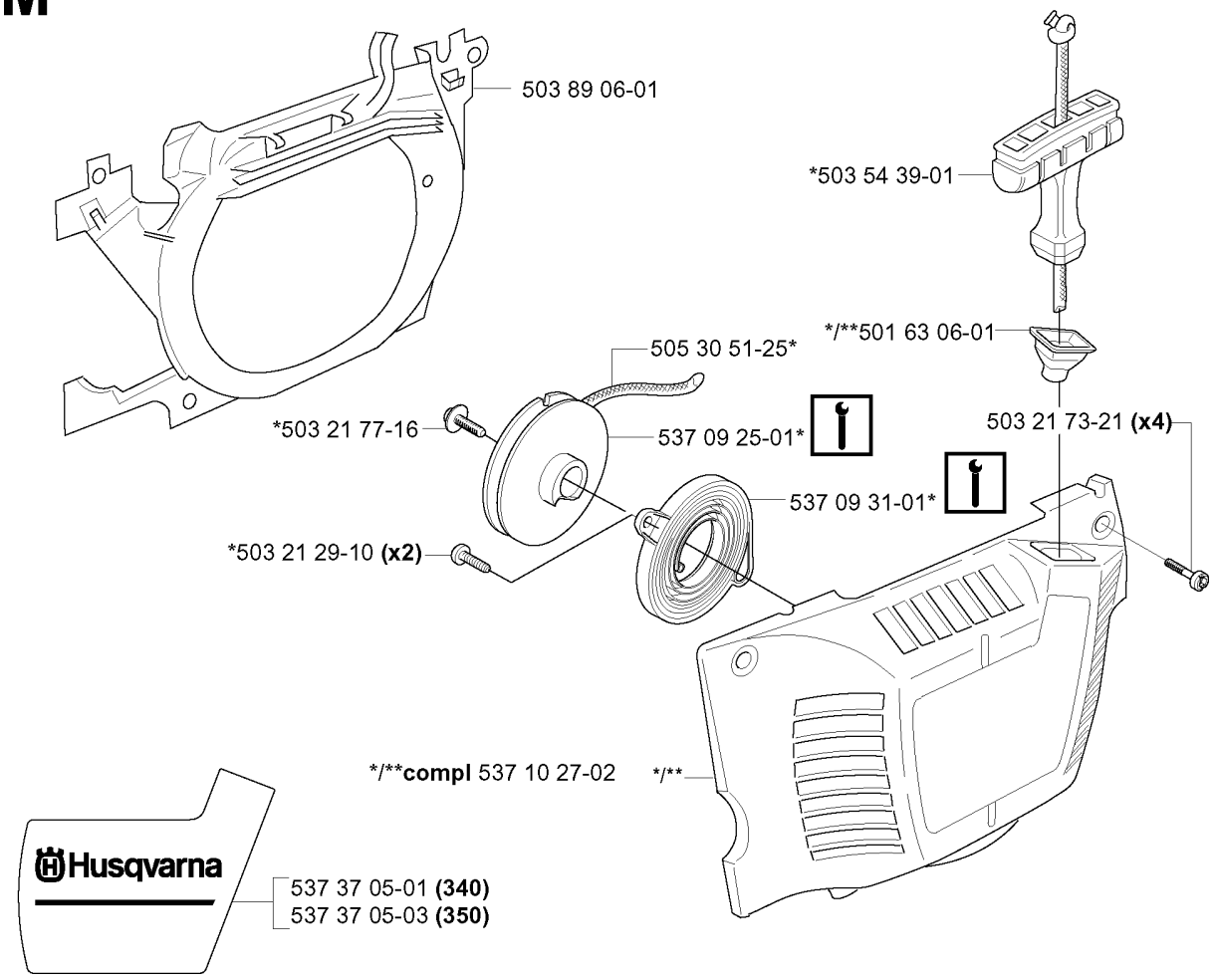

N ***compl** 503 28 32-08 **ZAMA C3-EL18B (340)**

ZAMA C3-EL18B

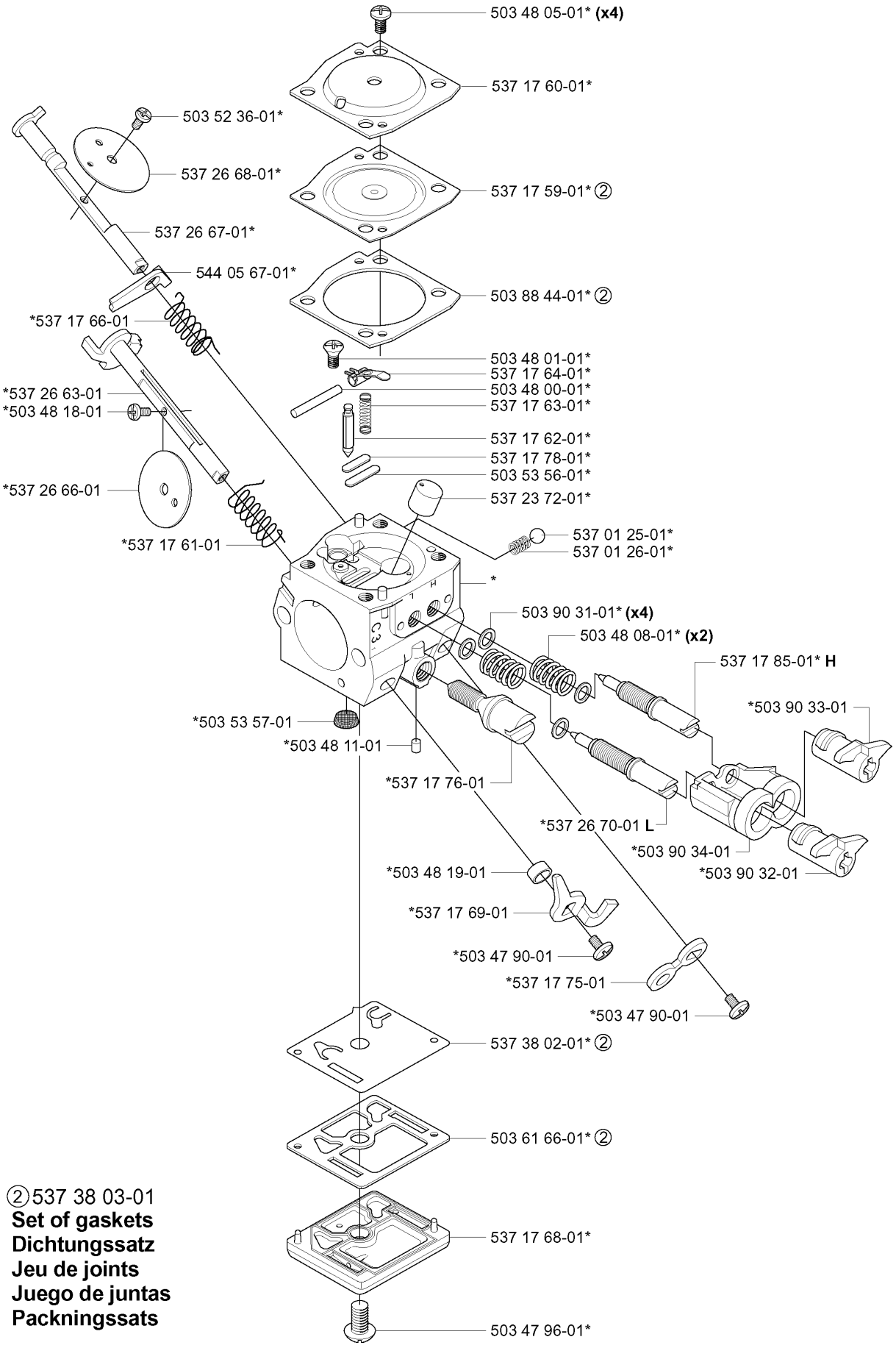

②537 38 03-01
Set of gaskets
Dichtungssatz
Jeu de joints
Juego de juntas
Packningssats

ZAMA C3-EL32

N ***compl** 503 28 32-08 **ZAMA C3-EL32 (340e, 345e, 350)**
Correction: 503 28 32-10

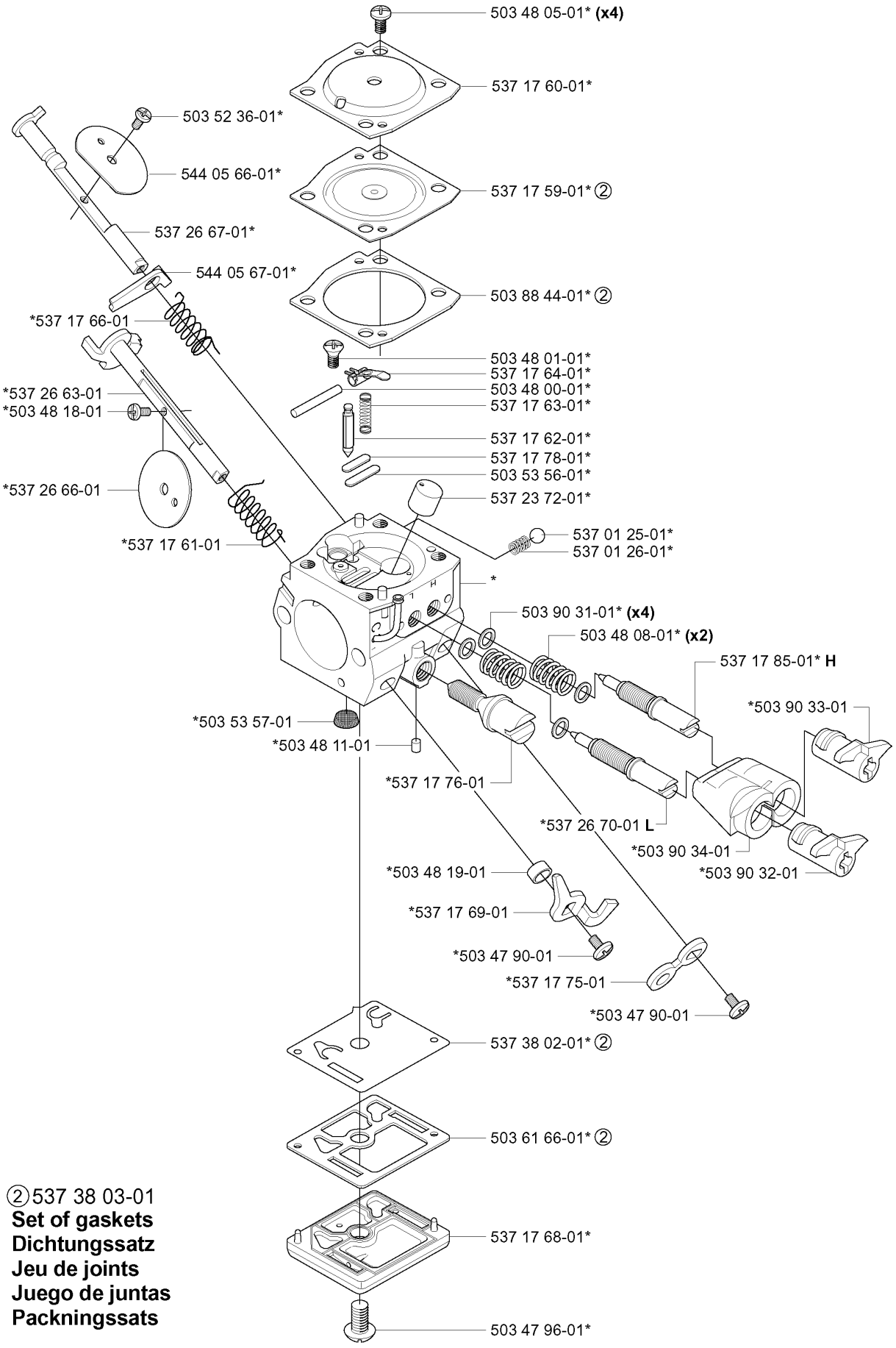

②537 38 03-01
Set of gaskets
Dichtungssatz
Jeu de joints
Juego de juntas
Packningssats

P **Tillbehör**
Accessories
Zubehöre
Accessoires
Accesorios

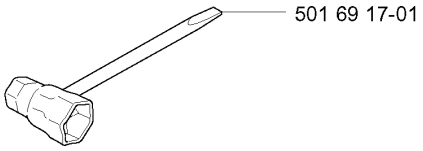

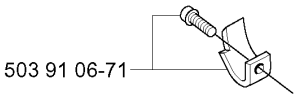

Winter kit
***compl** 537 42 29-01 **(340e, 345e)**
Correction: 544 01 31-01

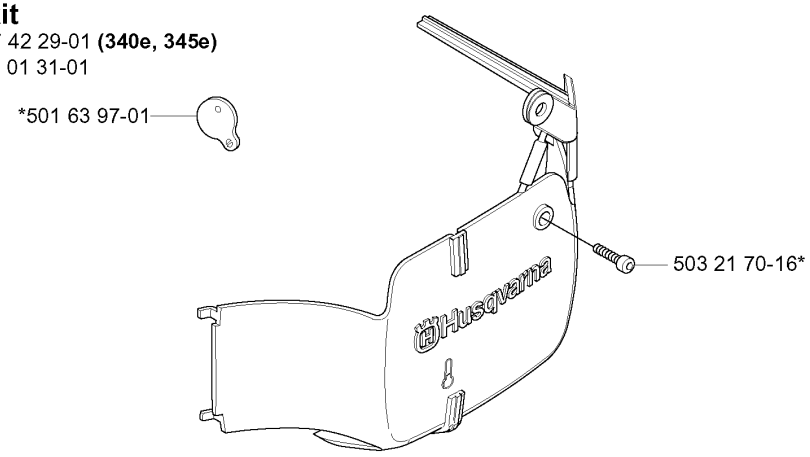

Winter kit
***compl** 537 04 28-02 **(340, 350)**

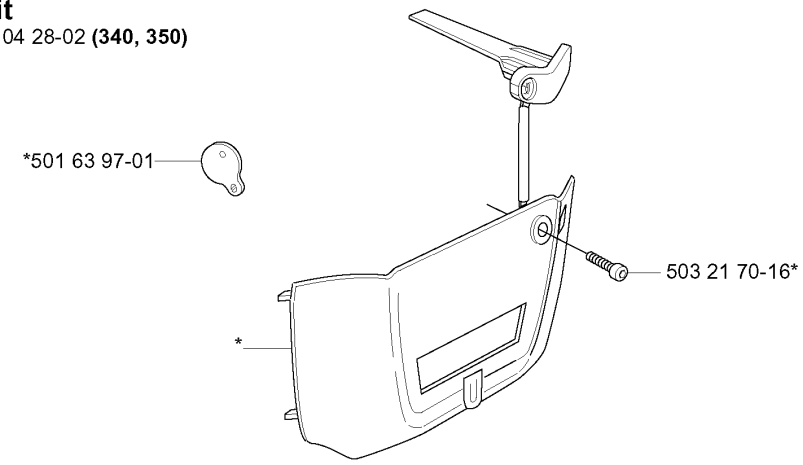

Q

Up to 991499999

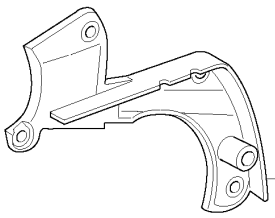

503 89 07-02

From 991500001 to 001400001

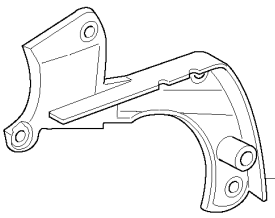

537 10 80-01

Q

Up to 991499999

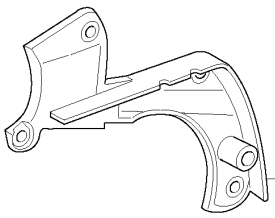

503 89 07-02

From 991500001 to 001400001

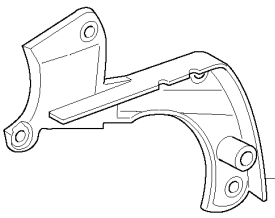

537 10 80-01