Husqvarna
340 (2001-09)

Rozkres je dokumentace výrobce (© příslušný výrobce) a slouží k identifikaci dílů. Pro výběr dílu se vždy řiďte katalogovým číslem.

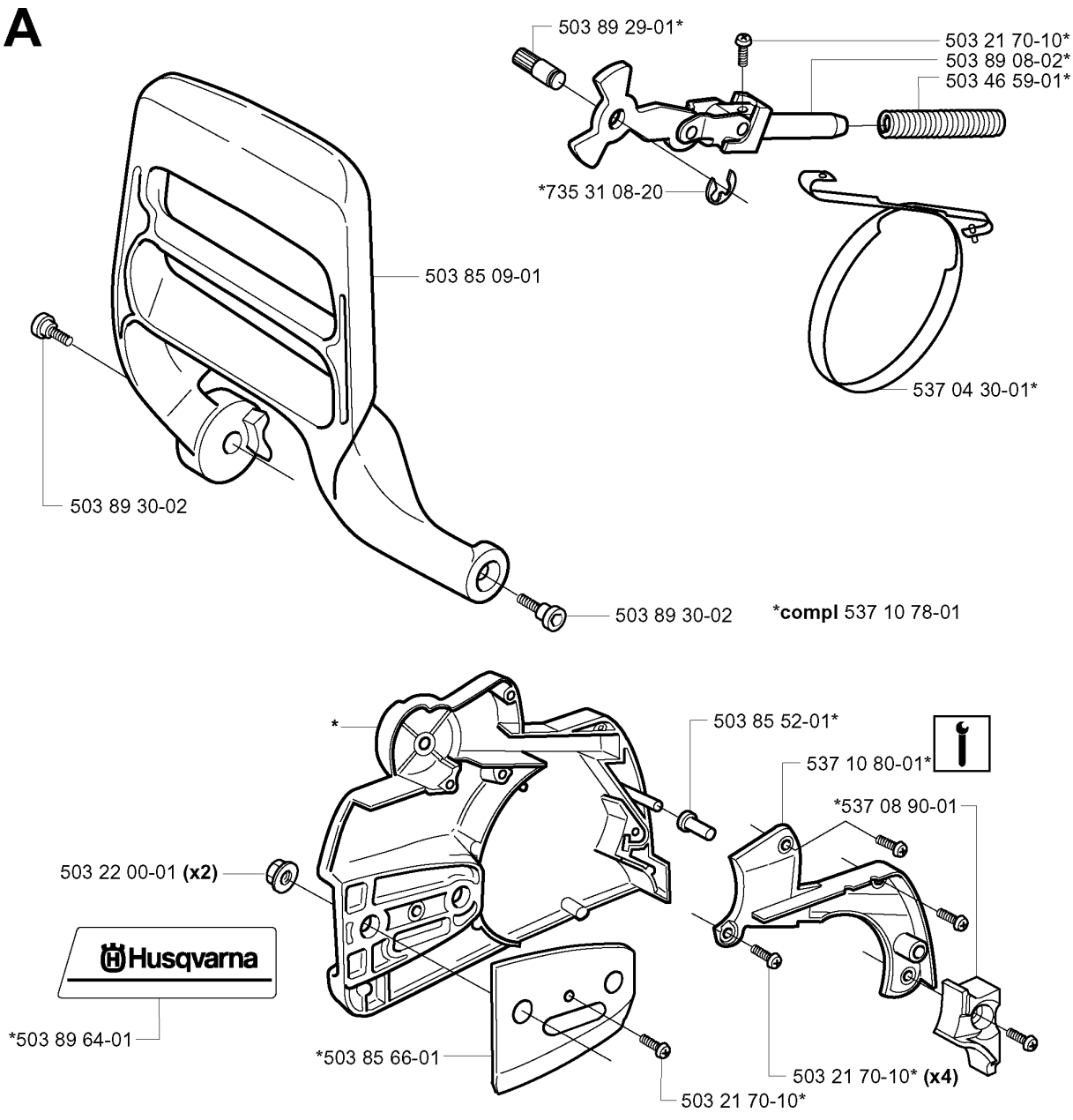
A
503 89 29-01*
503 21 70-10*
503 89 08-02*
503 46 59-01*
*735 31 08-20
503 85 09-01
537 04 30-01*
503 89 30-02
503 89 30-02
*compl 537 10 78-01
*
503 85 52-01*
537 10 80-01*
*537 08 90-01
503 22 00-01 (x2)
*503 89 64-01
*503 85 66-01
503 21 70-10* (x4)
503 21 70-10*

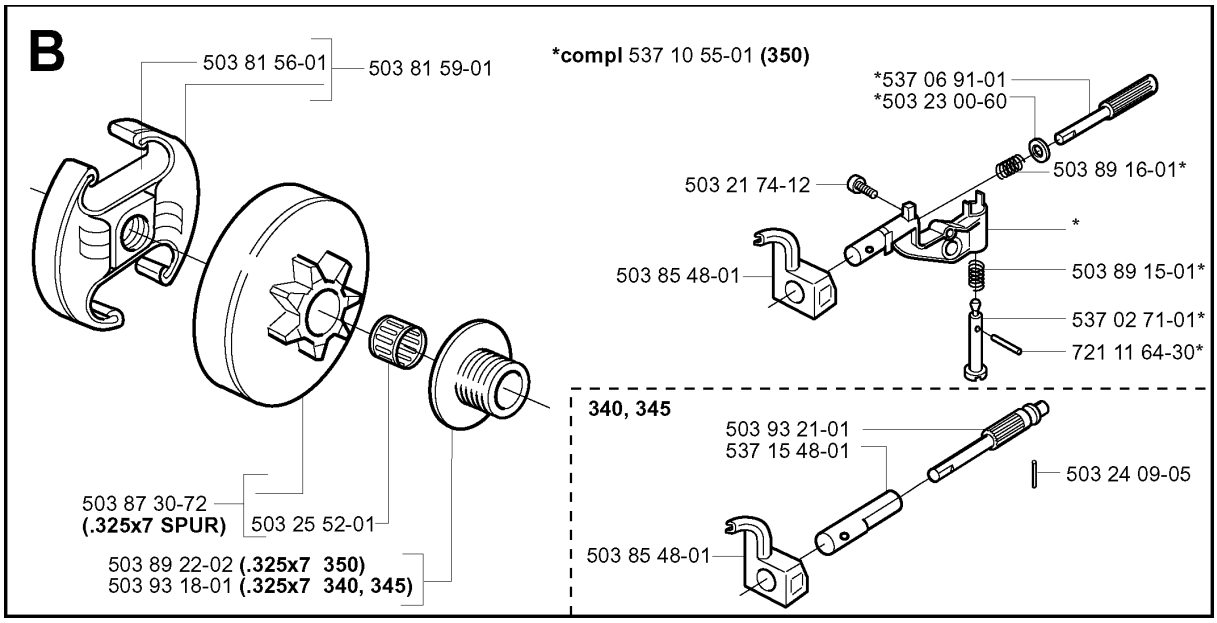
B
503 81 56-01
503 81 59-01
503 87 30-72
(.325x7 SPUR)
503 25 52-01
503 89 22-02 (.325x7 350)
503 93 18-01 (.325x7 340, 345)
*compl 537 10 55-01 (350)
*537 06 91-01
*503 23 00-60
503 89 16-01*
503 21 74-12
*
503 85 48-01
503 89 15-01*
537 02 71-01*
721 11 64-30*
340, 345
503 93 21-01
537 15 48-01
503 24 09-05
503 85 48-01

C ***compl** 503 91 05-01

*503 98 74-01

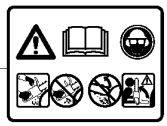

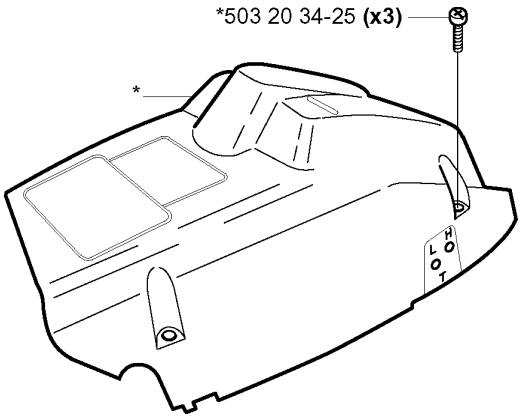

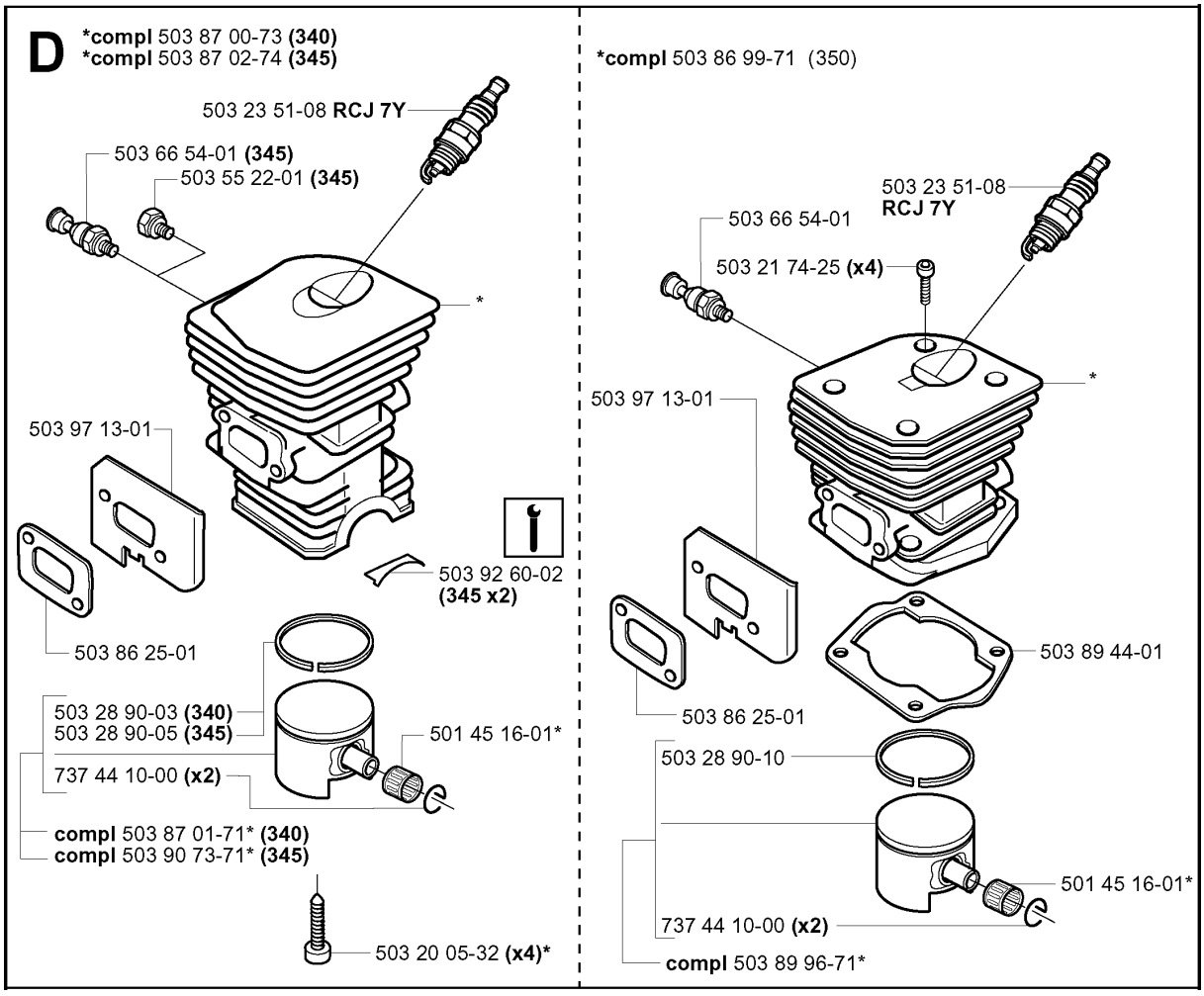
D
*compl 503 87 00-73 (340)
*compl 503 87 02-74 (345)
503 23 51-08 RCJ 7Y
503 66 54-01 (345)
503 55 22-01 (345)
*
503 97 13-01
503 92 60-02
(345 x2)
503 86 25-01
503 28 90-03 (340)
503 28 90-05 (345)
501 45 16-01*
737 44 10-00 (x2)
compl 503 87 01-71* (340)
compl 503 90 73-71* (345)
503 20 05-32 (x4)*
*compl 503 86 99-71 (350)
503 23 51-08
RCJ 7Y
503 66 54-01
503 21 74-25 (x4)
*
503 97 13-01
503 89 44-01
503 86 25-01
503 28 90-10
501 45 16-01*
737 44 10-00 (x2)
compl 503 89 96-71*

E ***compl** 503 85 80-71

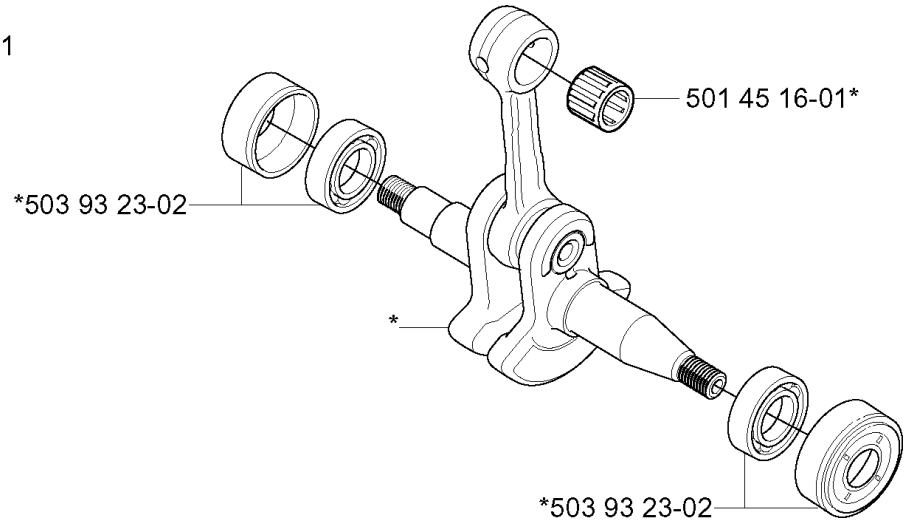

F ***compl** 503 86 27-02 **(EU) 350**

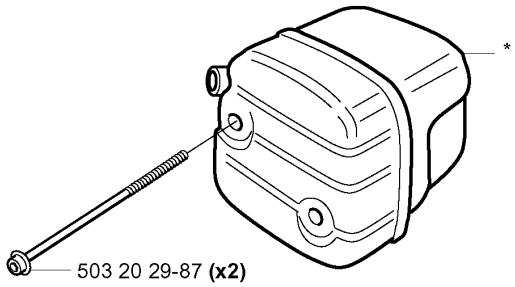

***compl** 503 87 96-01 **(FG) 340, 345**

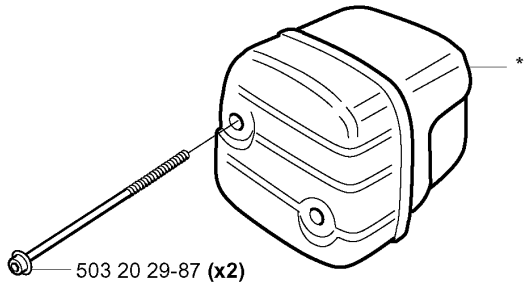

***compl** 503 86 28-02 **(DF) 340, 345, 350**

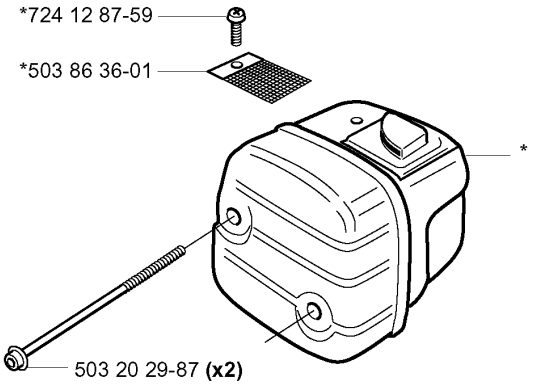

G

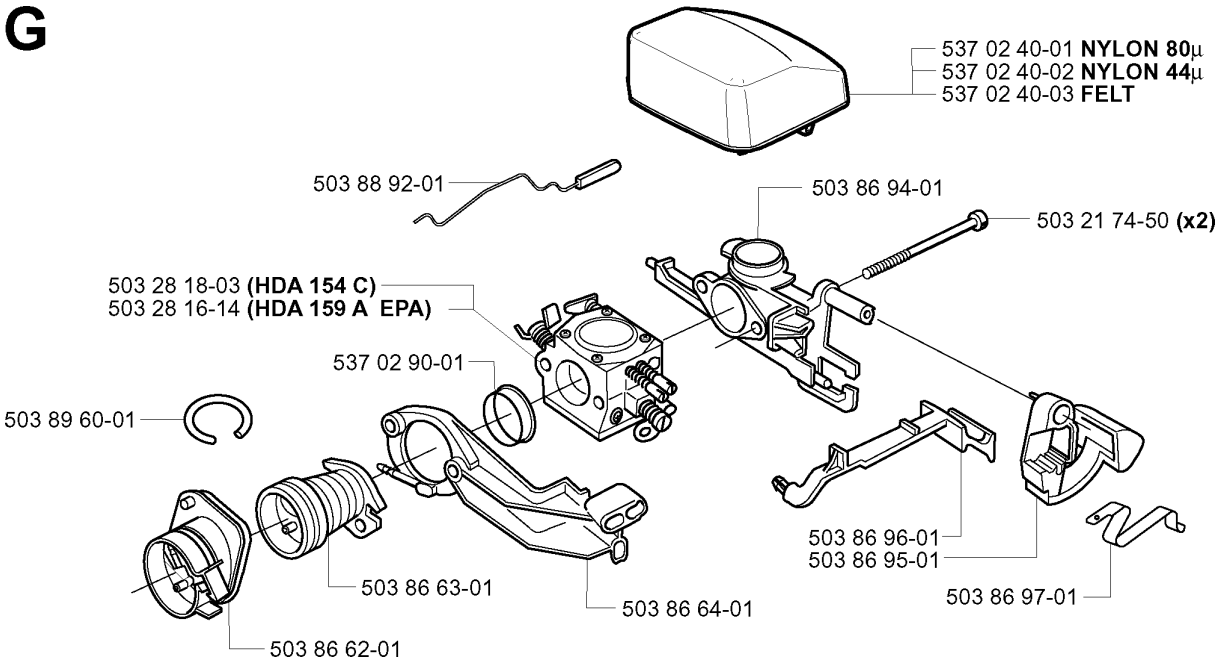
537 02 40-01 NYLON 80µ
537 02 40-02 NYLON 44µ
537 02 40-03 FELT
503 88 92-01
503 86 94-01
503 21 74-50 (x2)
503 28 18-03 (HDA 154 C)
503 28 16-14 (HDA 159 A EPA)
537 02 90-01
503 89 60-01
503 86 96-01
503 86 95-01
503 86 97-01
503 86 63-01
503 86 64-01
503 86 62-01

H *compl 537 17 20-01

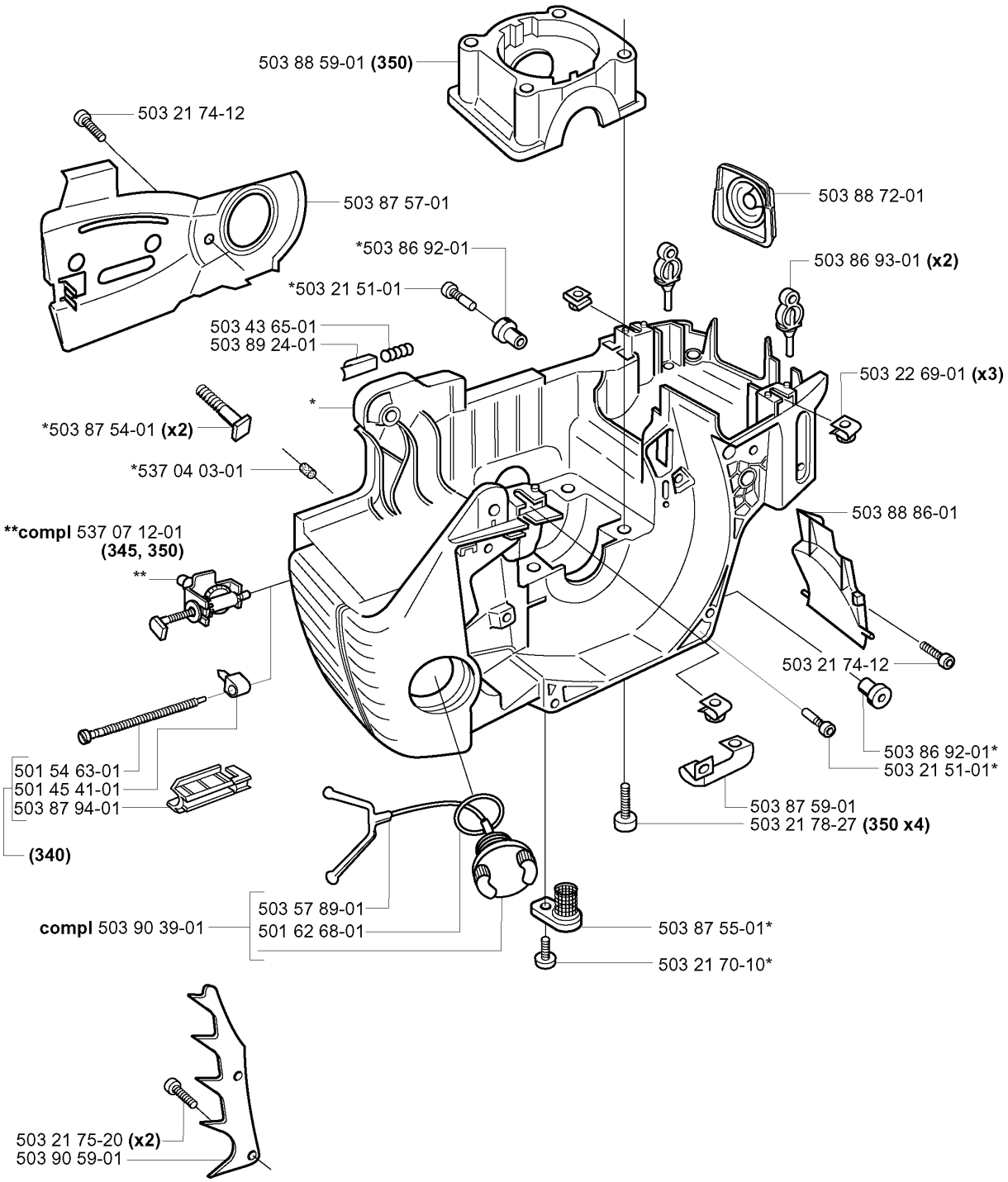

J ***compl** 503 86 37-71

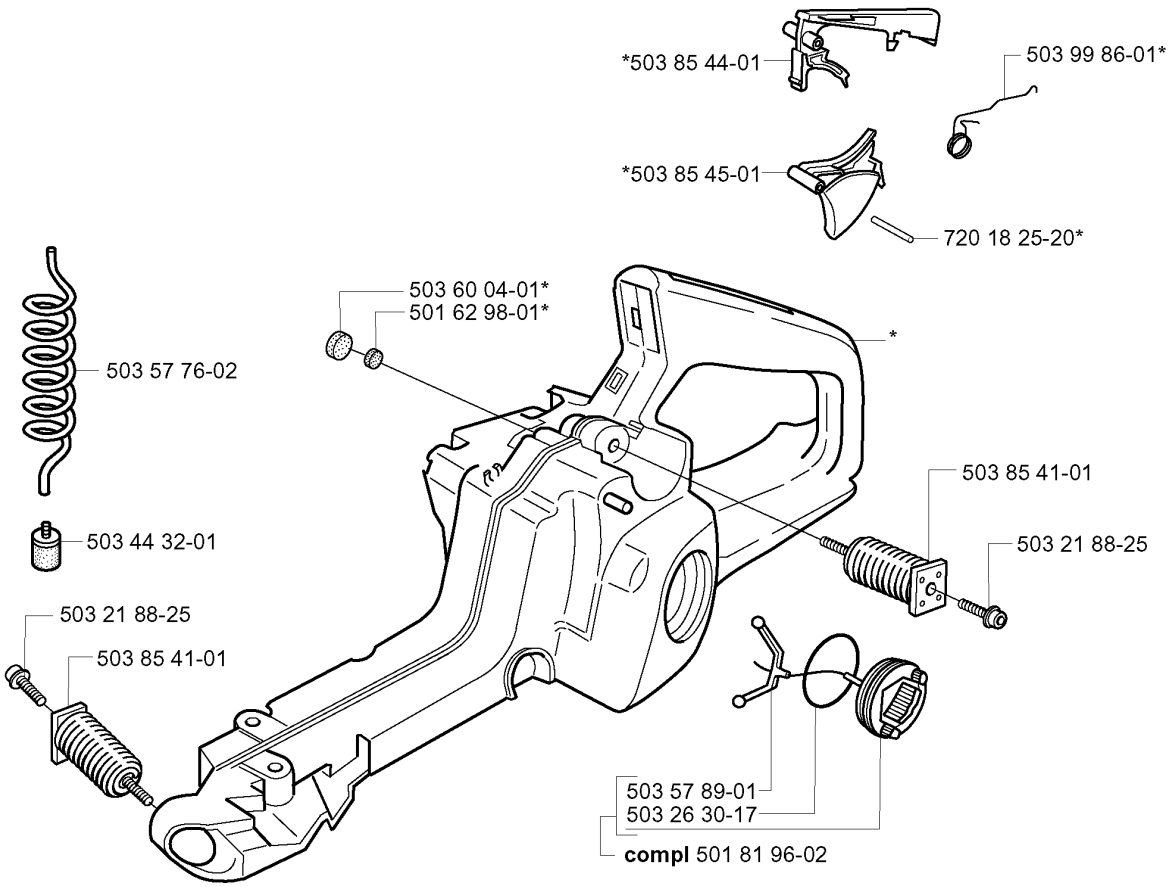

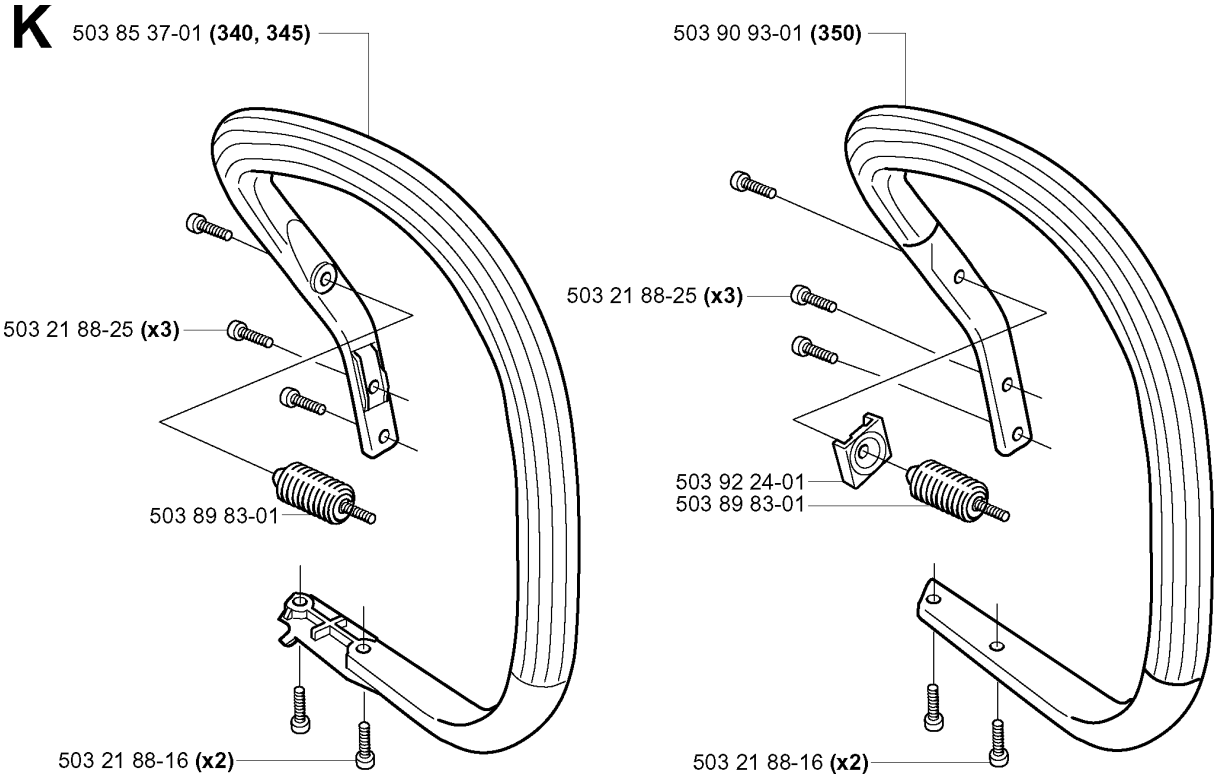
K
503 85 37-01 (340, 345)
503 21 88-25 (x3)
503 89 83-01
503 21 88-16 (x2)
503 90 93-01 (350)
503 21 88-25 (x3)
503 92 24-01
503 89 83-01
503 21 88-16 (x2)

L

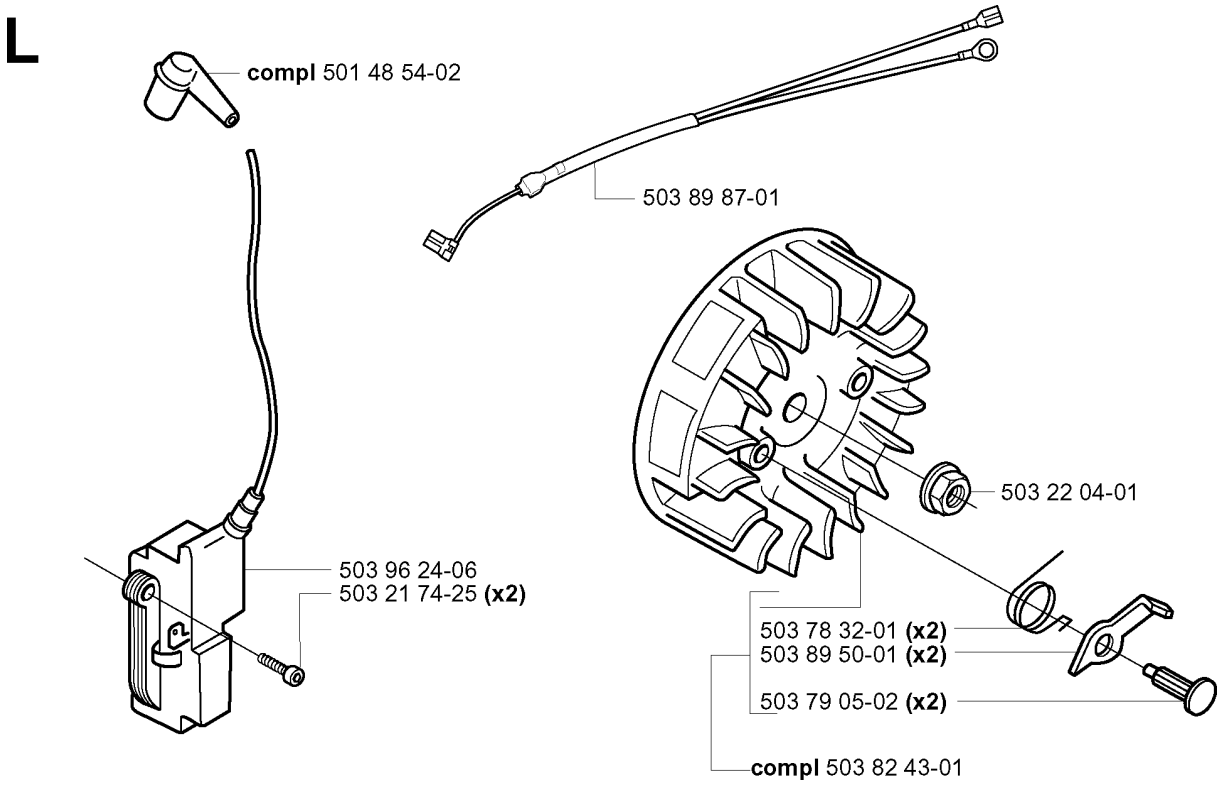
compl 501 48 54-02
503 89 87-01
503 22 04-01
503 96 24-06
503 21 74-25 (x2)
503 78 32-01 (x2)
503 89 50-01 (x2)
503 79 05-02 (x2)
compl 503 82 43-01

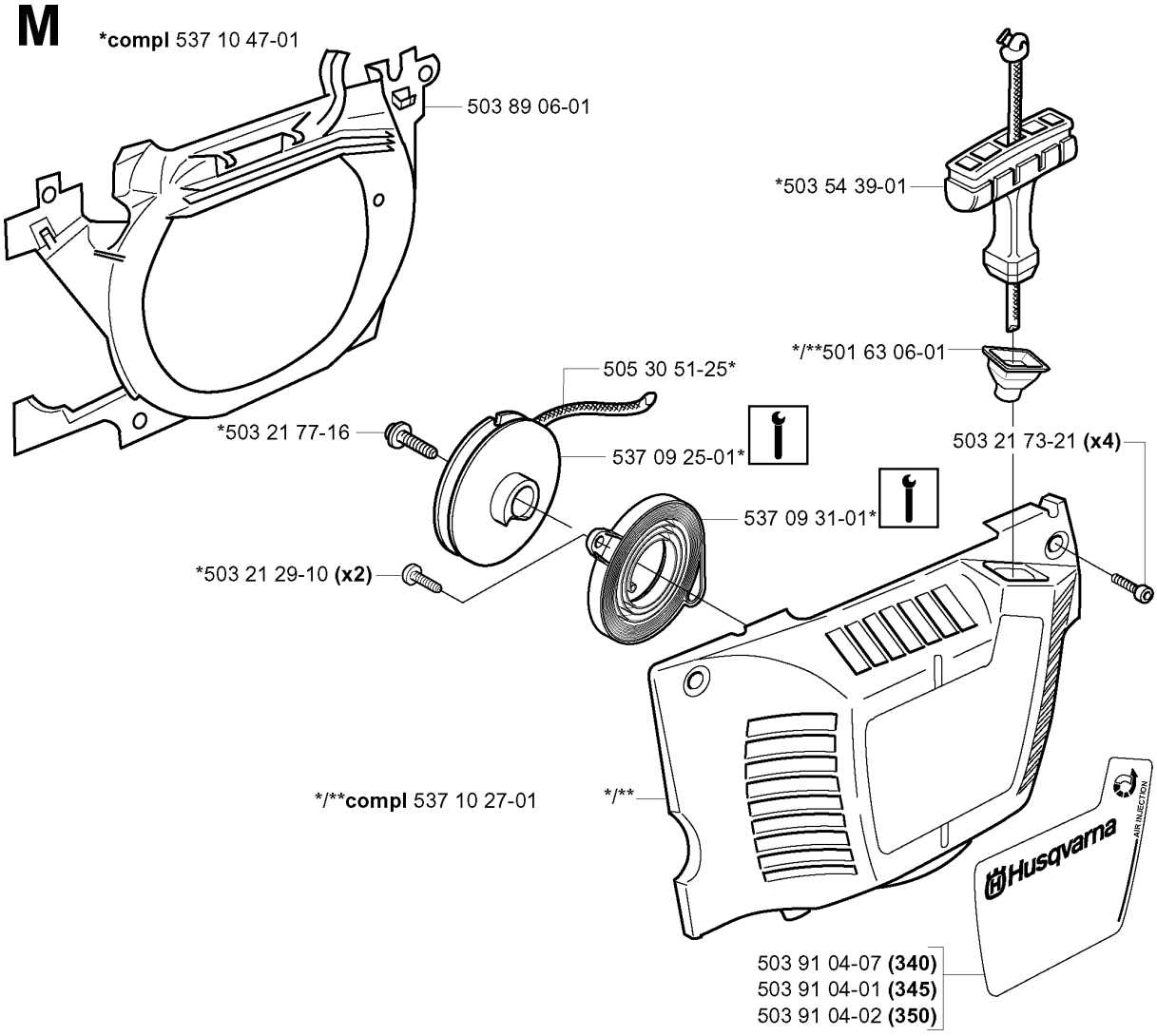
M
*compl 537 10 47-01
503 89 06-01
*503 54 39-01
*/**501 63 06-01
505 30 51-25*
*503 21 77-16
537 09 25-01*
503 21 73-21 (x4)
537 09 31-01*
*503 21 29-10 (x2)
*/**compl 537 10 27-01
*/**
Husqvarna
AIR INJECTION
503 91 04-07 (340)
503 91 04-01 (345)
503 91 04-02 (350)

N ***compl** 503 28 18-03 **Walbro HDA 154 C**
****compl** 503 28 16-14 **Walbro HDA 159 A (EPA)**

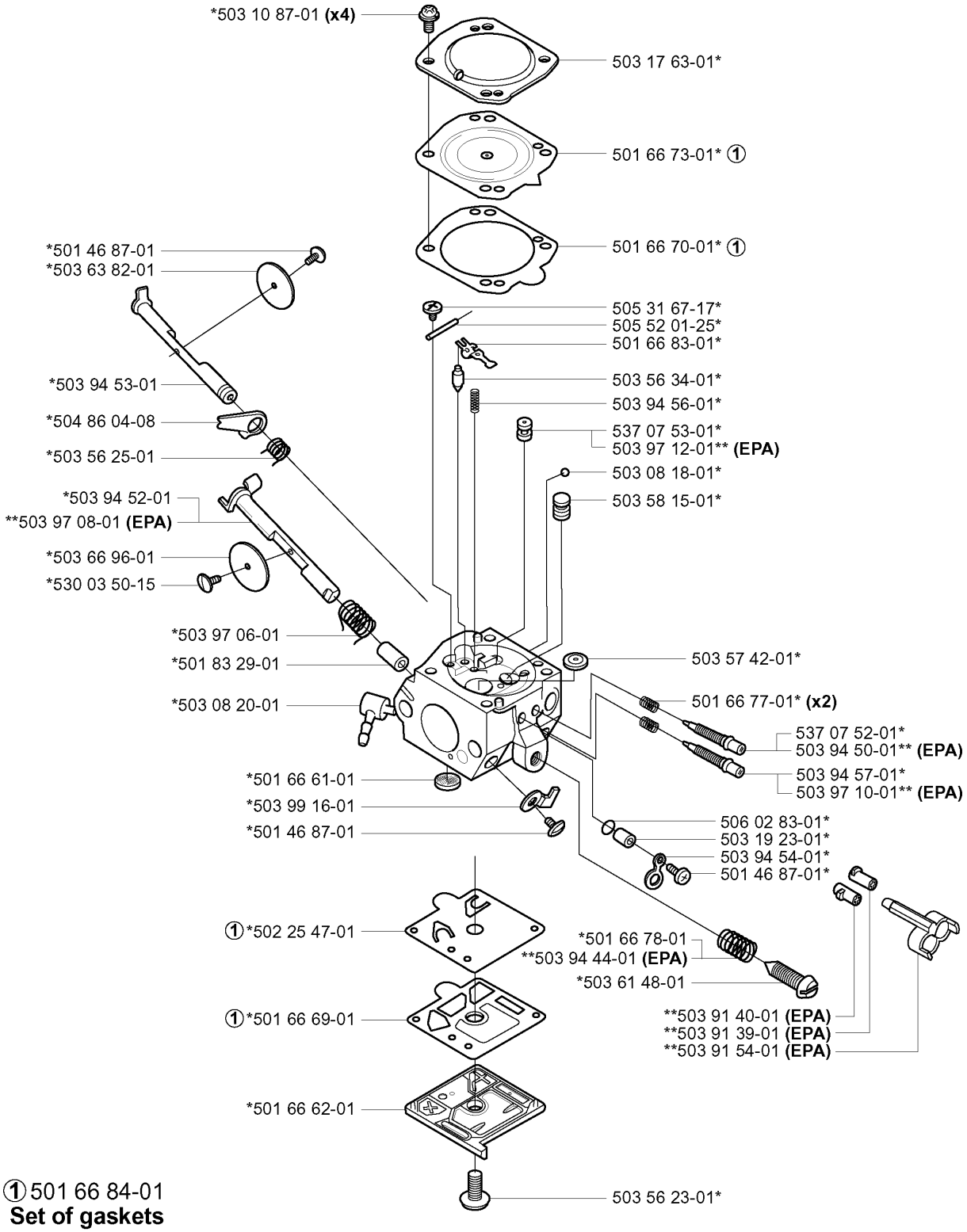

①501 66 84-01
Set of gaskets
Dichtungssatz
Jeu de joints
Juego de juntas
Packningssats

P **Tillbehör**
Accessories
Zubehöre
Accessoires
Accesorios

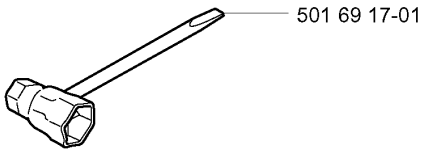

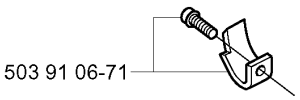

Winter kit
***compl** 537 04 28-71

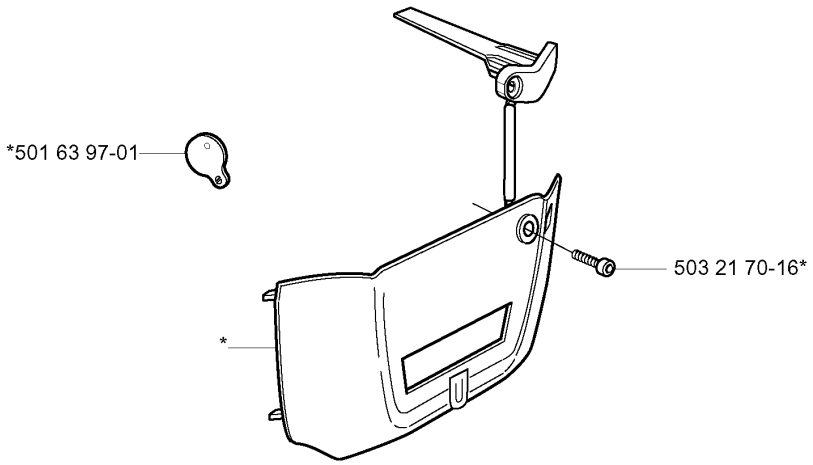

Q

Up to 991499999 (1999)

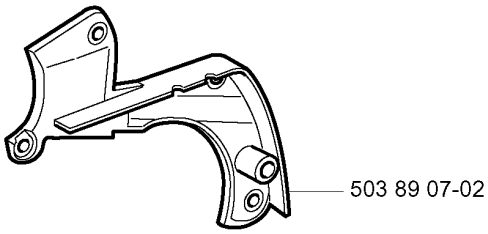

Up to 010604200 (340) (2001)
Up to 010602850 (345) (2001)
Up to 010702450 (350) (2001)

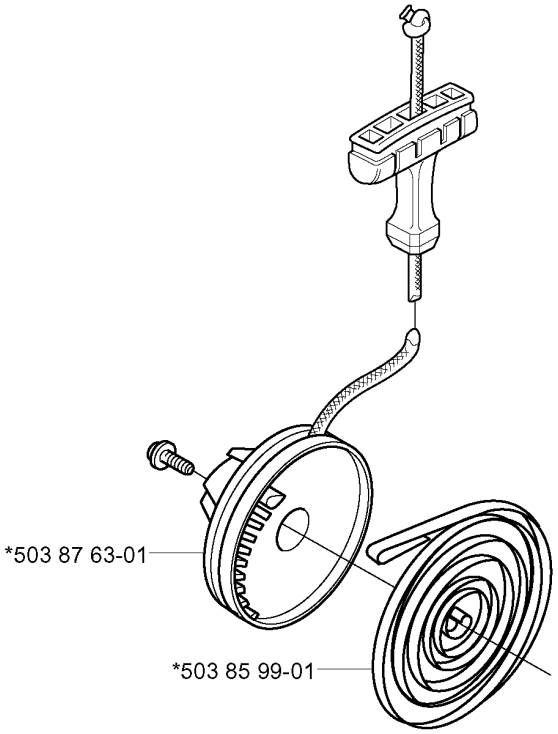

Up to 000601101 (345) (2000)

