Husqvarna
268 (1999-11)

Rozkres je dokumentace výrobce (© příslušný výrobce) a slouží k identifikaci dílů. Pro výběr dílu se vždy řiďte katalogovým číslem.

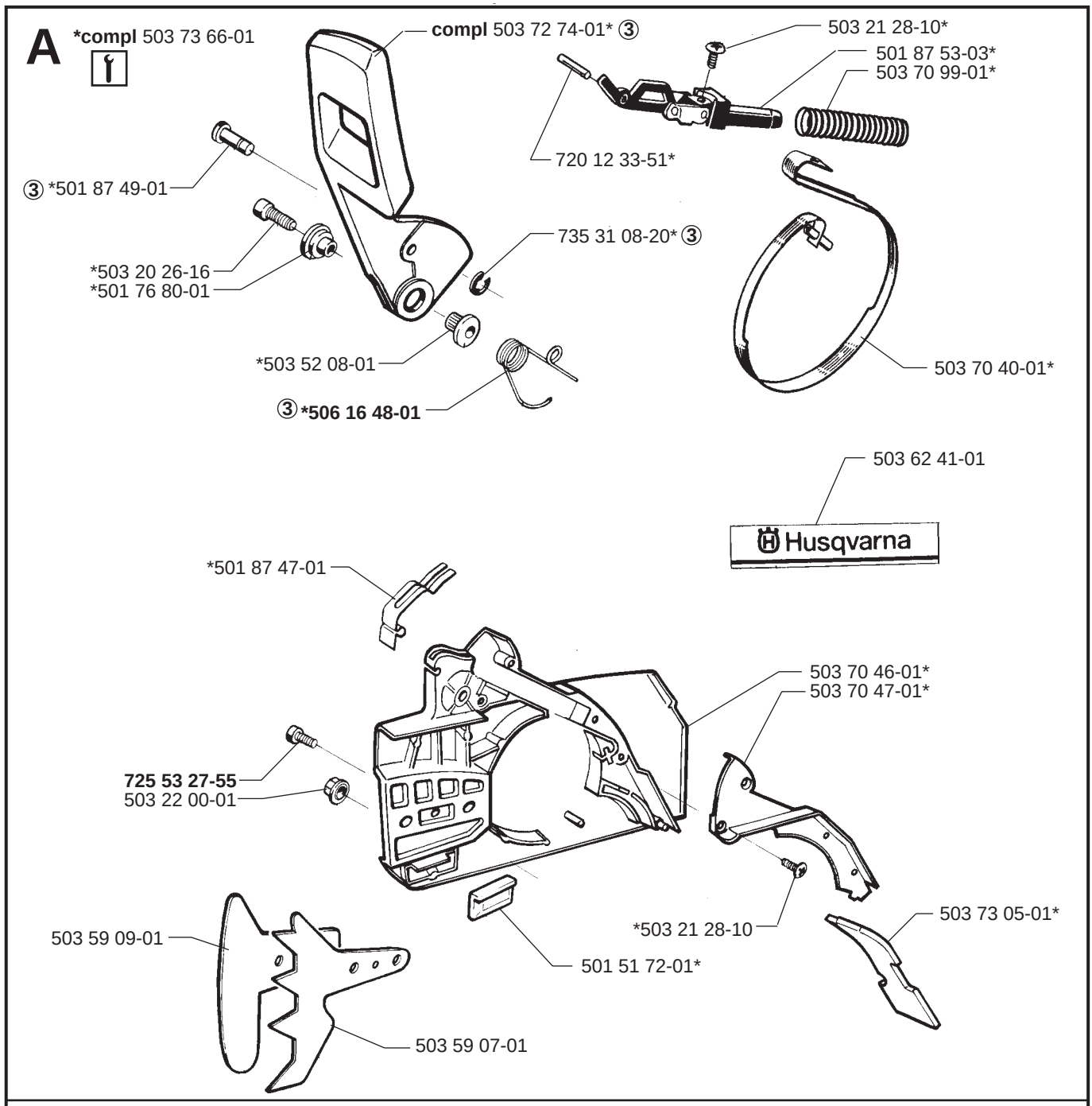
A
*compl 503 73 66-01
compl 503 72 74-01* ③
503 21 28-10*
501 87 53-03*
503 70 99-01*
720 12 33-51*
③ *501 87 49-01
735 31 08-20* ③
*503 20 26-16
*501 76 80-01
*503 52 08-01
503 70 40-01*
③ *506 16 48-01
503 62 41-01
Husqvarna
*501 87 47-01
503 70 46-01*
503 70 47-01*
725 53 27-55
503 22 00-01
*503 21 28-10
503 73 05-01*
503 59 09-01
501 51 72-01*
503 59 07-01
L
*compl 501 51 25-01
*720 12 37-50
*501 51 33-01
501 51 32-01*
*501 51 36-01
725 52 93-56
501 51 31-01*
*503 26 02-04
501 51 34-01*
503 65 09-01 (3/8"x7)
501 67 41-01 (3/8"x8)
503 23 00-16*
501 51 48-01
503 23 10-01*
734 48 48-01*
735 31 07-20*
501 51 39-01*
501 51 37-01*
740 42 21-00*
503 74 43-01
503 74 44-02
501 28 85-01*
721 42 03-25*
501 51 38-01
503 23 00-13
501 59 80-02 (3/8"x7)
505 30 36-61 (3/8"x8)
501 51 99-01
503 25 34-01
501 54 41-02
501 83 17-01
501 53 59-01
501 83 15-03 (3/8"x8)
501 83 15-04 (3/8"x7)

B

***compl** 503 40 60-01
***compl** 503 40 60-02 **(USA)**

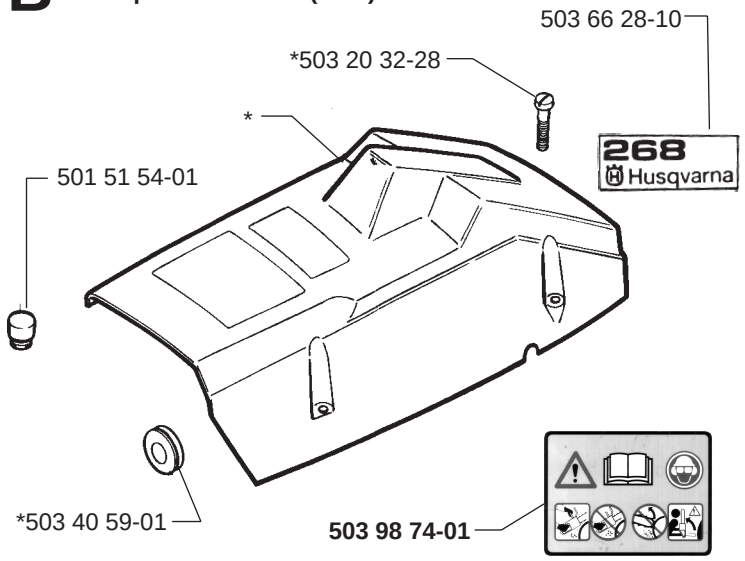

C

***compl** 503 61 10-71

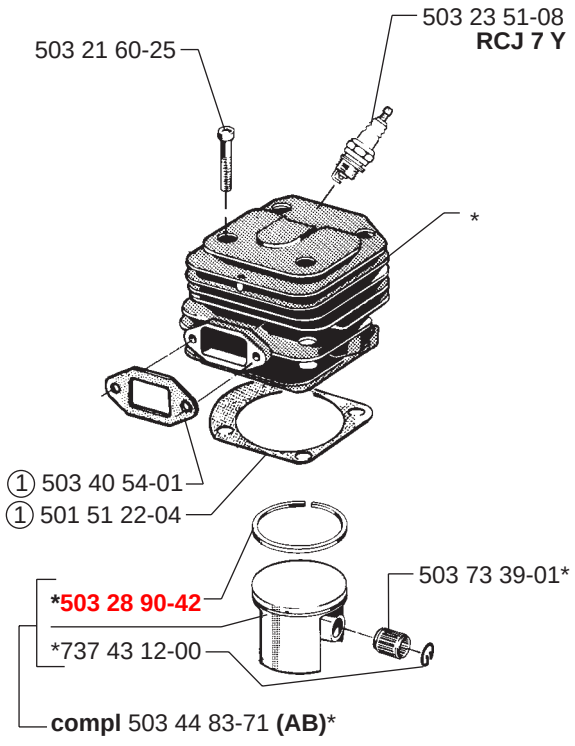

G

***compl** 503 59 92-06 **(FF)**
***compl** 503 59 92-05 **(DF)**
compl 503 40 64-02 **(DJ)**

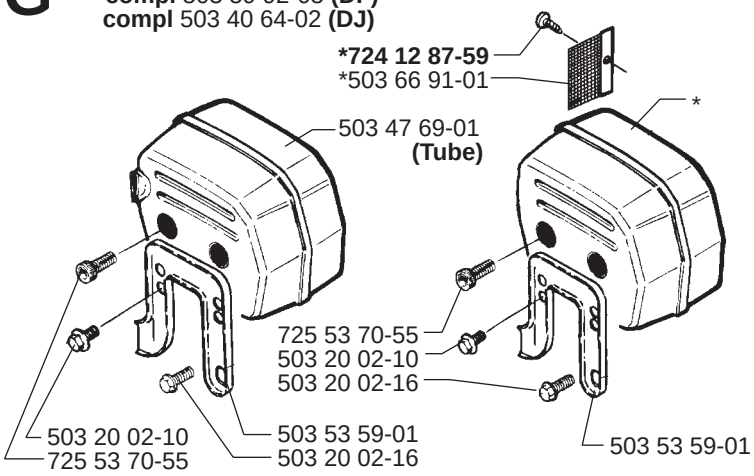

H

***compl** 503 61 33-71

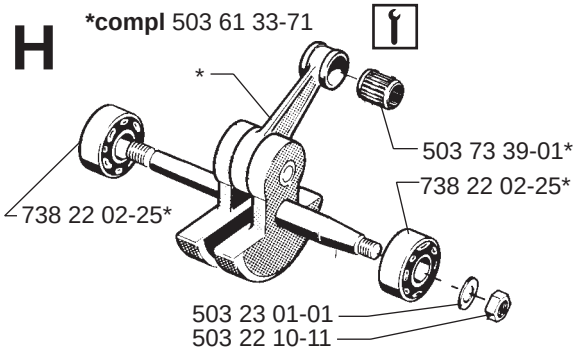

M

***compl** 501 77 99-01

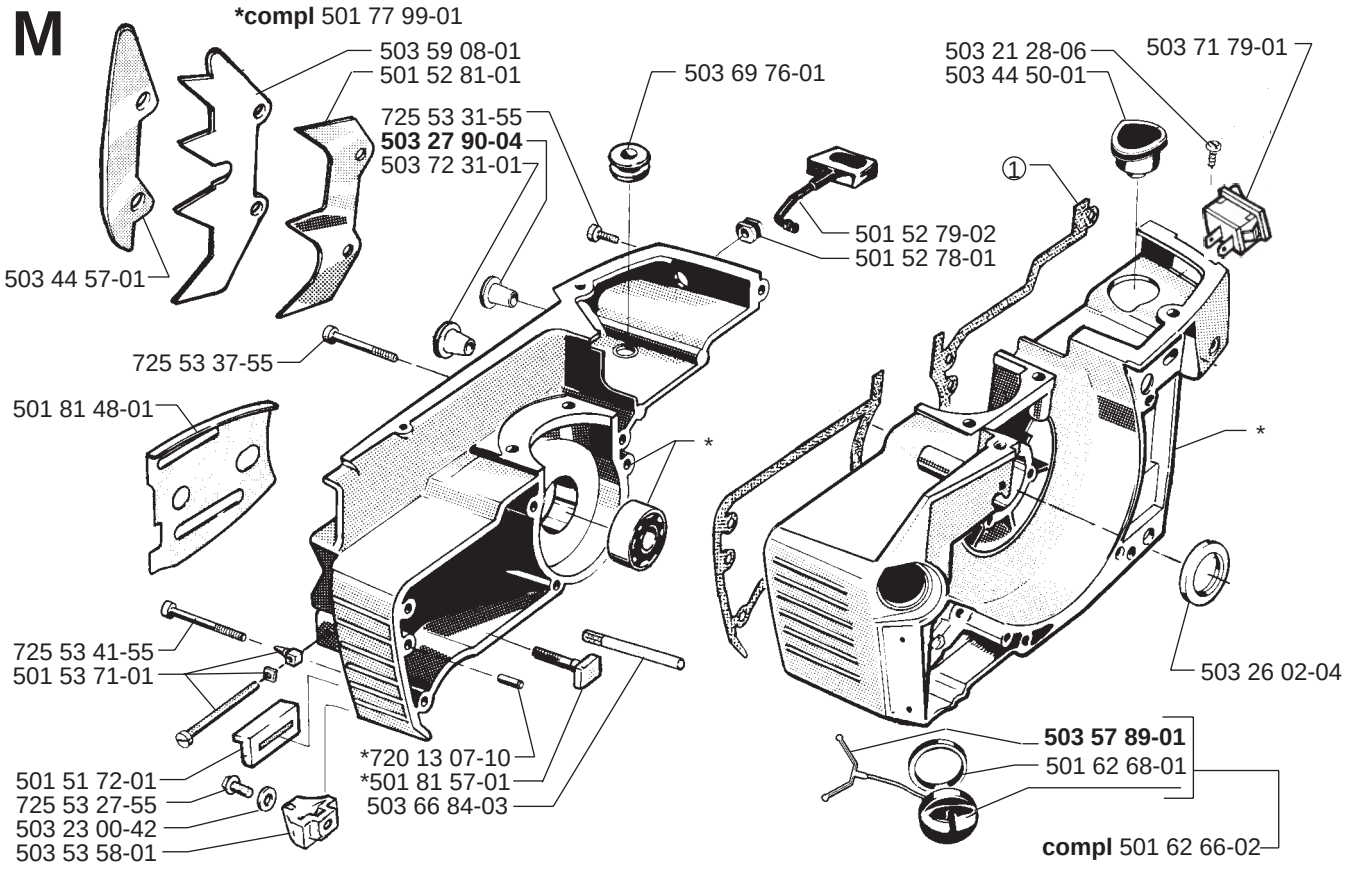

D

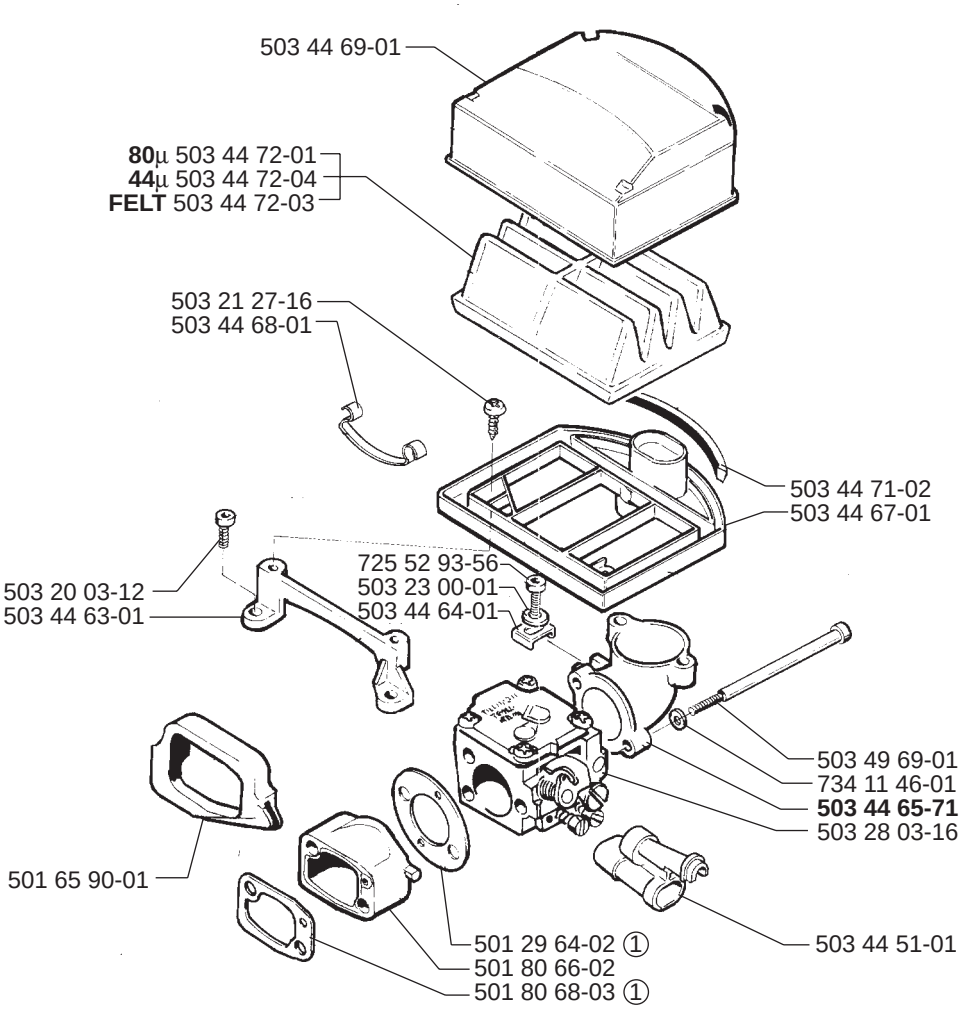
503 44 69-01
80µ 503 44 72-01
44µ 503 44 72-04
FELT 503 44 72-03
503 21 27-16
503 44 68-01
503 44 71-02
503 44 67-01
503 20 03-12
503 44 63-01
725 52 93-56
503 23 00-01
503 44 64-01
503 49 69-01
734 11 46-01
503 44 65-71
503 28 03-16
501 65 90-01
501 29 64-02 ①
501 80 66-02
501 80 68-03 ①
503 44 51-01

J

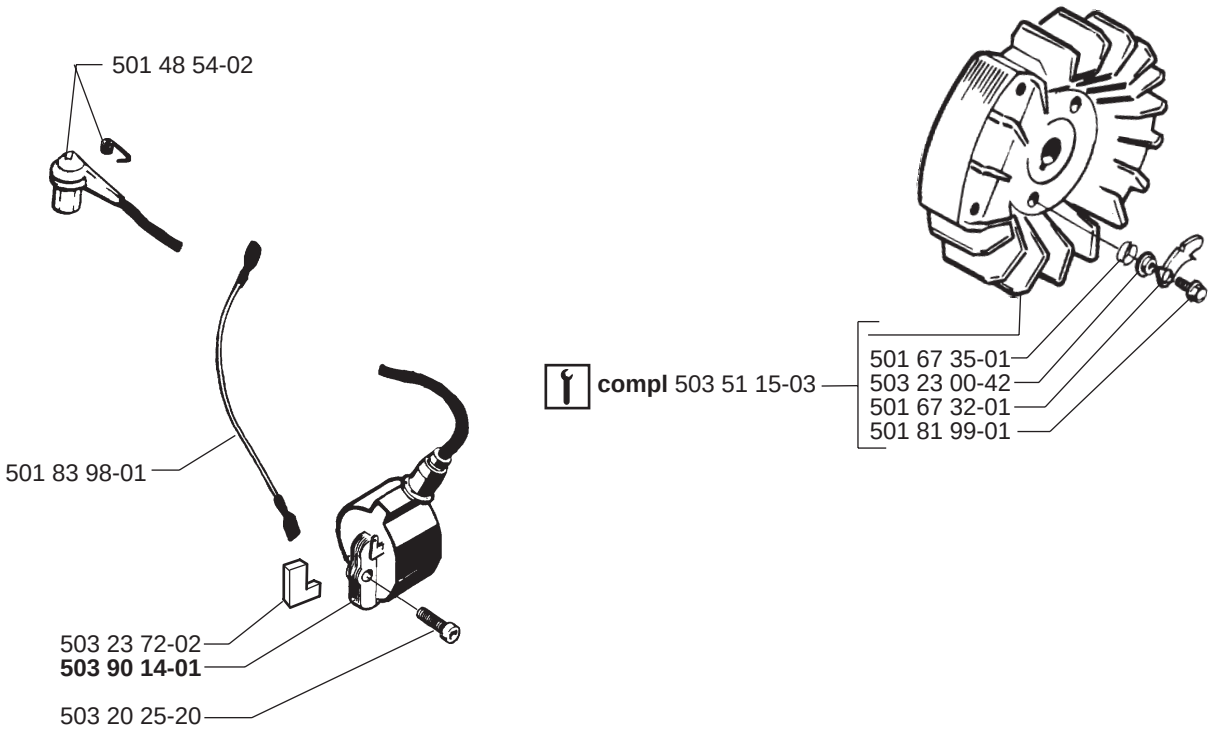
501 48 54-02
501 83 98-01
503 23 72-02
503 90 14-01
503 20 25-20
compl 503 51 15-03
501 67 35-01
503 23 00-42
501 67 32-01
501 81 99-01

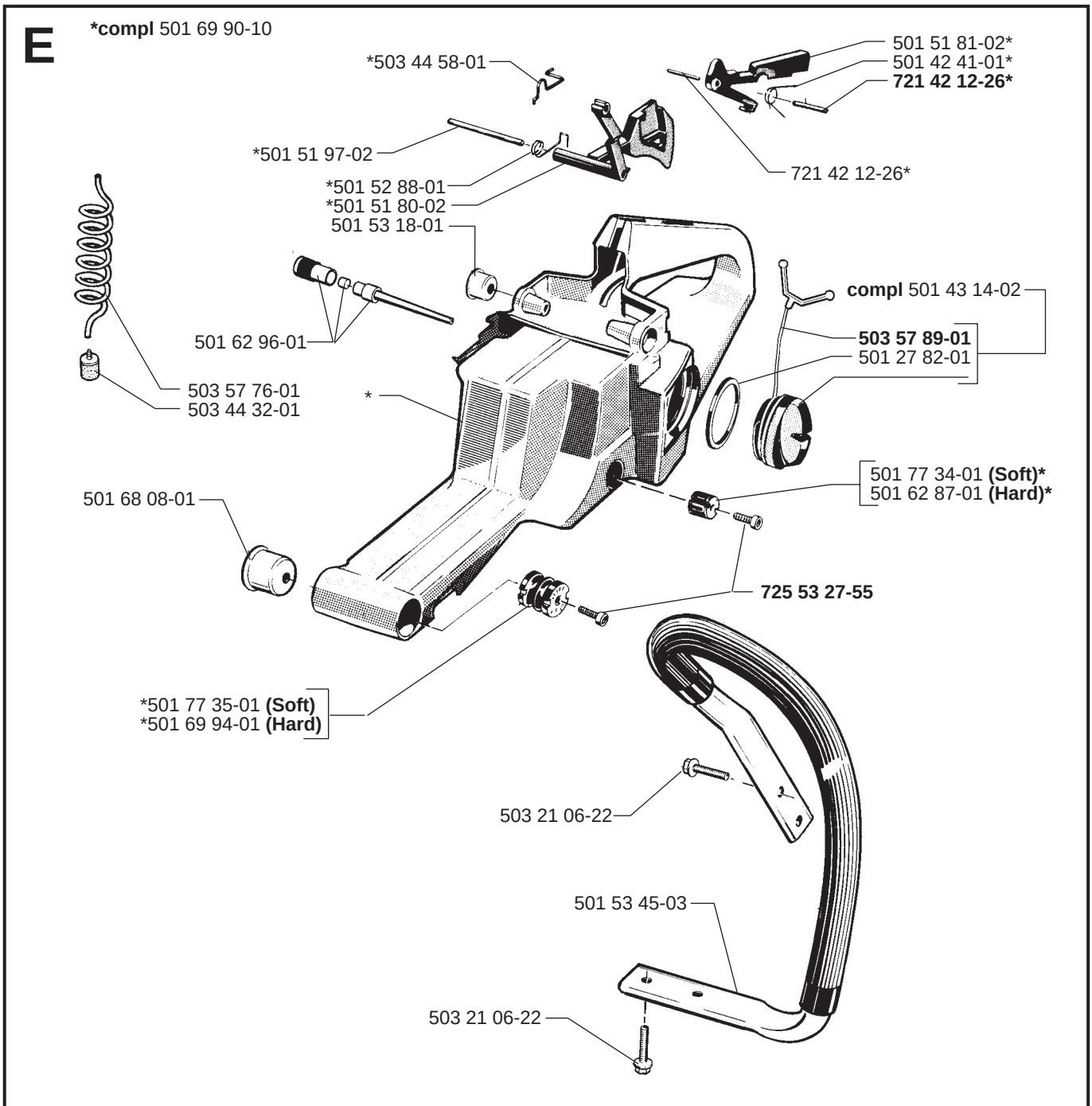
E
*compl 501 69 90-10
*503 44 58-01
501 51 81-02*
501 42 41-01*
721 42 12-26*
*501 51 97-02
721 42 12-26*
*501 52 88-01
*501 51 80-02
501 53 18-01
compl 501 43 14-02
501 62 96-01
503 57 89-01
501 27 82-01
503 57 76-01
503 44 32-01
*
501 77 34-01 (Soft)*
501 62 87-01 (Hard)*
501 68 08-01
725 53 27-55
*501 77 35-01 (Soft)
*501 69 94-01 (Hard)
503 21 06-22
501 53 45-03
503 21 06-22

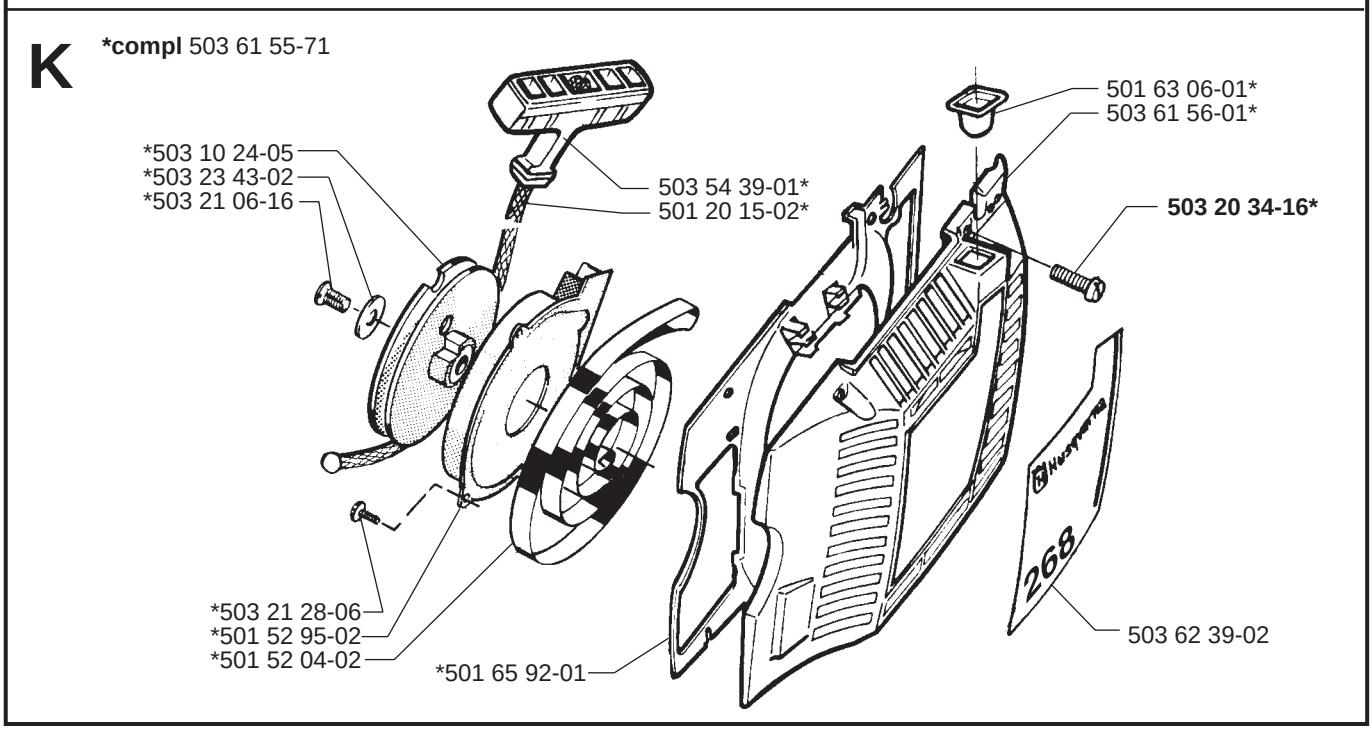
K
*compl 503 61 55-71
501 63 06-01*
503 61 56-01*
*503 10 24-05
*503 23 43-02
*503 21 06-16
503 54 39-01*
501 20 15-02*
503 20 34-16*
268
*503 21 28-06
*501 52 95-02
*501 52 04-02
*501 65 92-01
503 62 39-02

N

***compl** 503 28 03-16

HS 260 A

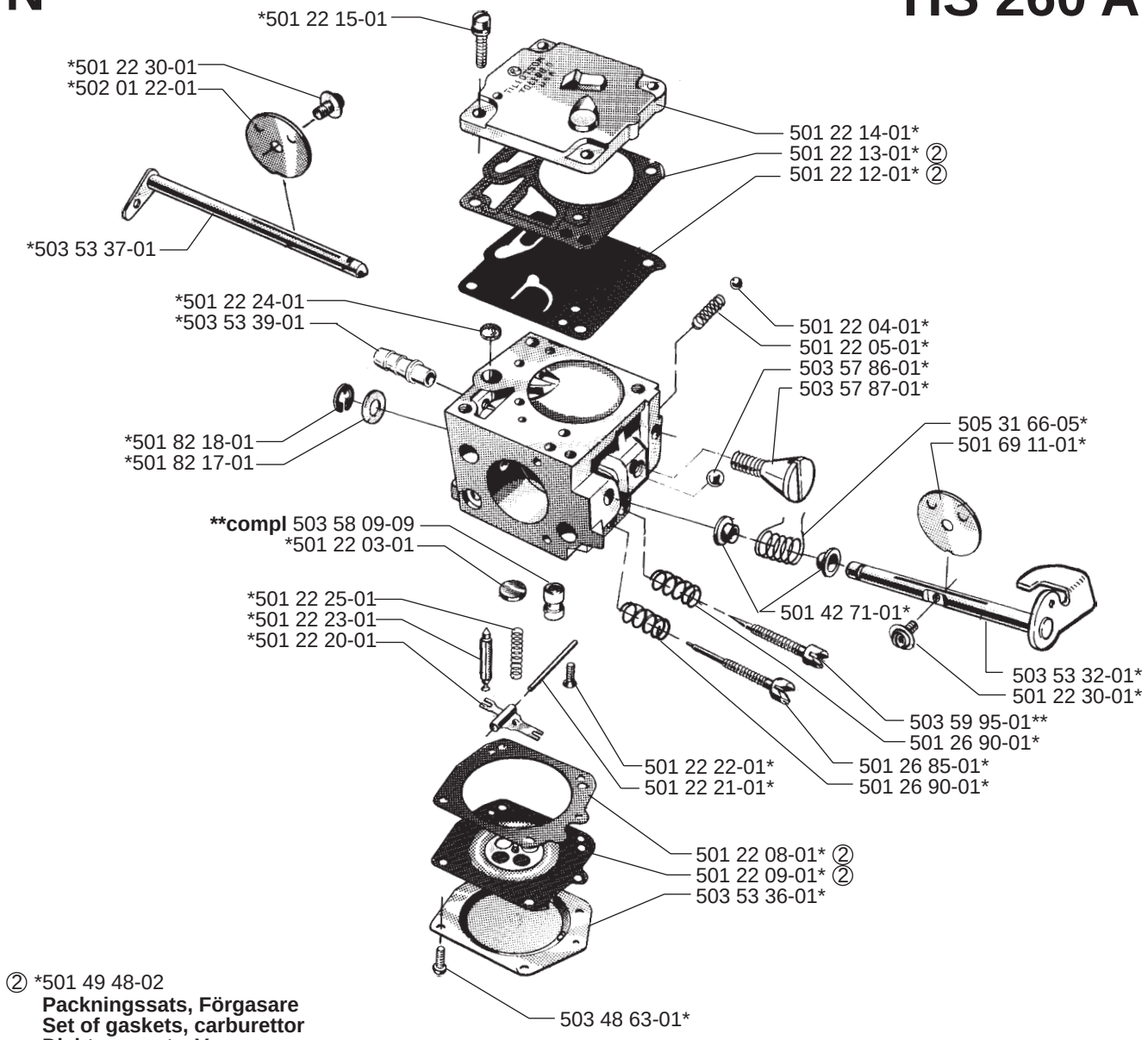

② *501 49 48-02
Packningssats, Förgasare
Set of gaskets, carburettor
Dichtungssatz, Vergaser
Jeu de joints, carburayeur

R

Levereras endast som reservdel
Delivery as spare part only
Nur als Ersatzteil lieferbar
Livrable seulement comme pièce de rechange
Solo como repuesto
Zasilà se jenom jako nàhradni dil

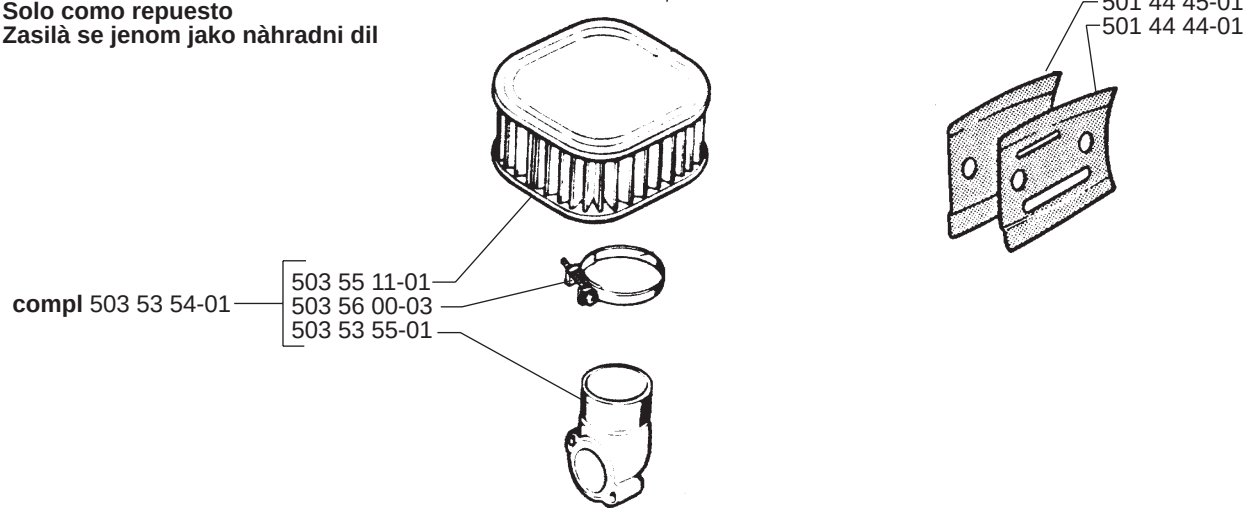

P

***compl** 503 55 85-01

Tillbehör
Accessories
Zubhöre
Accessoires
Accesorios
Pomucky

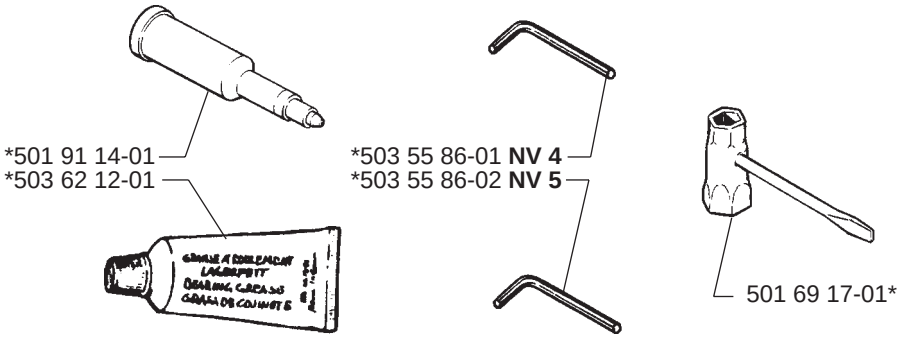

S

Up to 4261951

***compl** 501 52 84-02

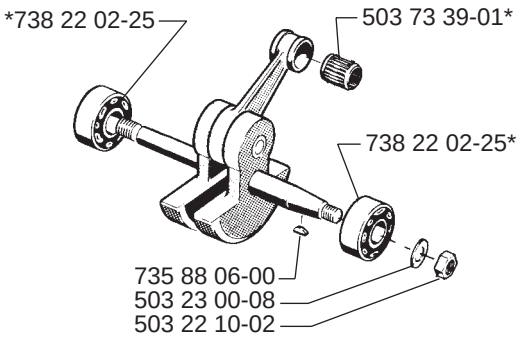

Up to 4230001

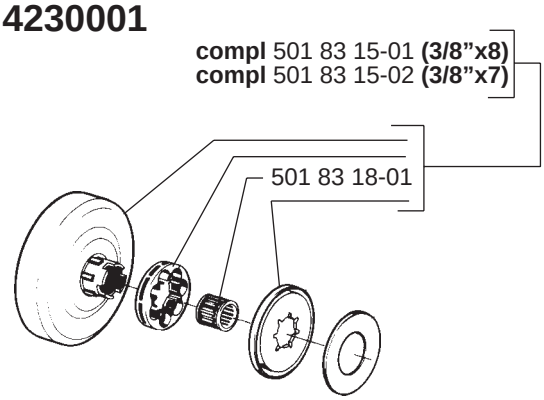

Up to 4261951

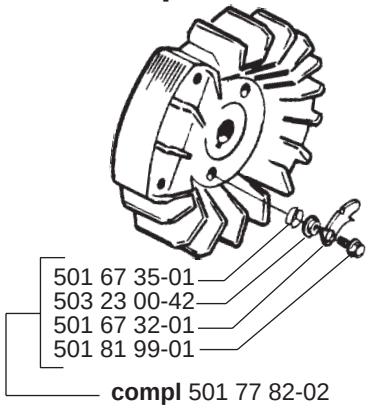

*Up to 4500001

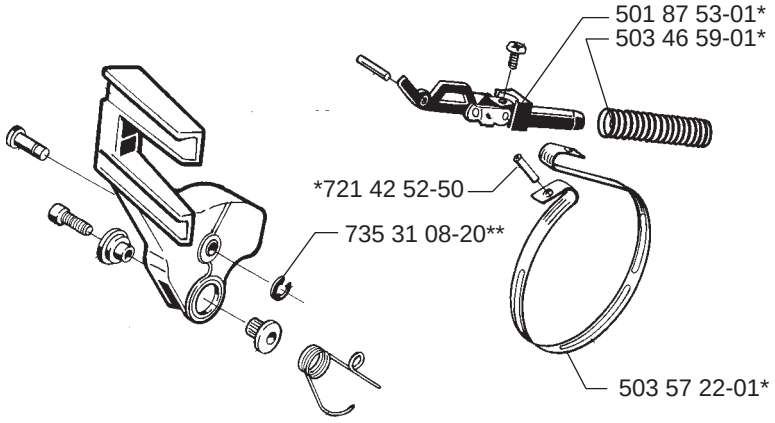

T

Up to 7460001

