Husqvarna
240 R (2002-08)

Rozkres je dokumentace výrobce (© příslušný výrobce) a slouží k identifikaci dílů. Pro výběr dílu se vždy řiďte katalogovým číslem.

A ***compl** 502 28 57-02

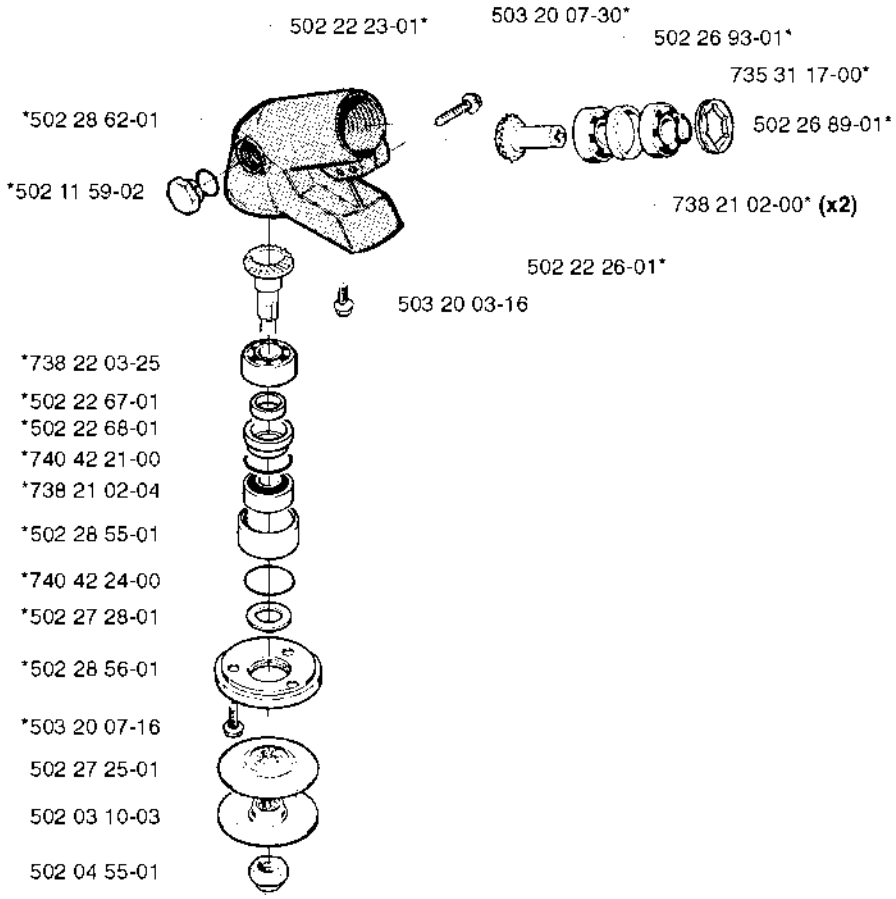

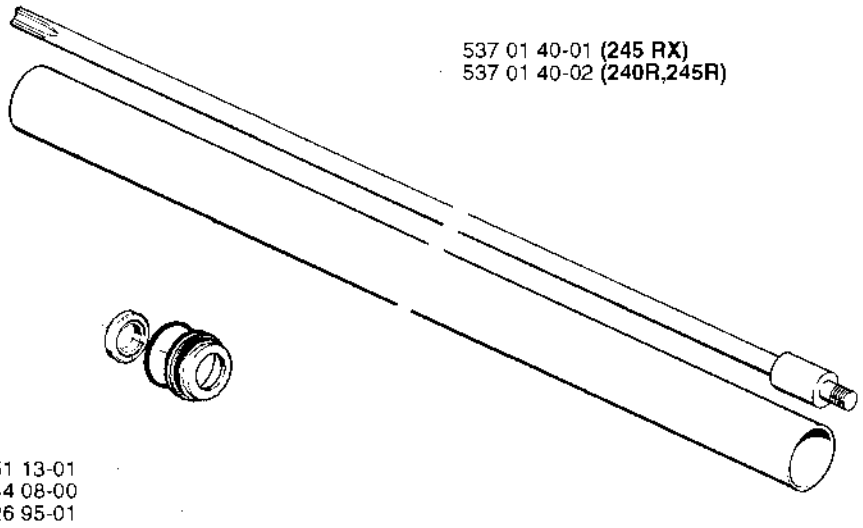

502 12 02-03 **(245 RX)**
502 12 02-05 **(240R,245R)**

537 02 76-02



B

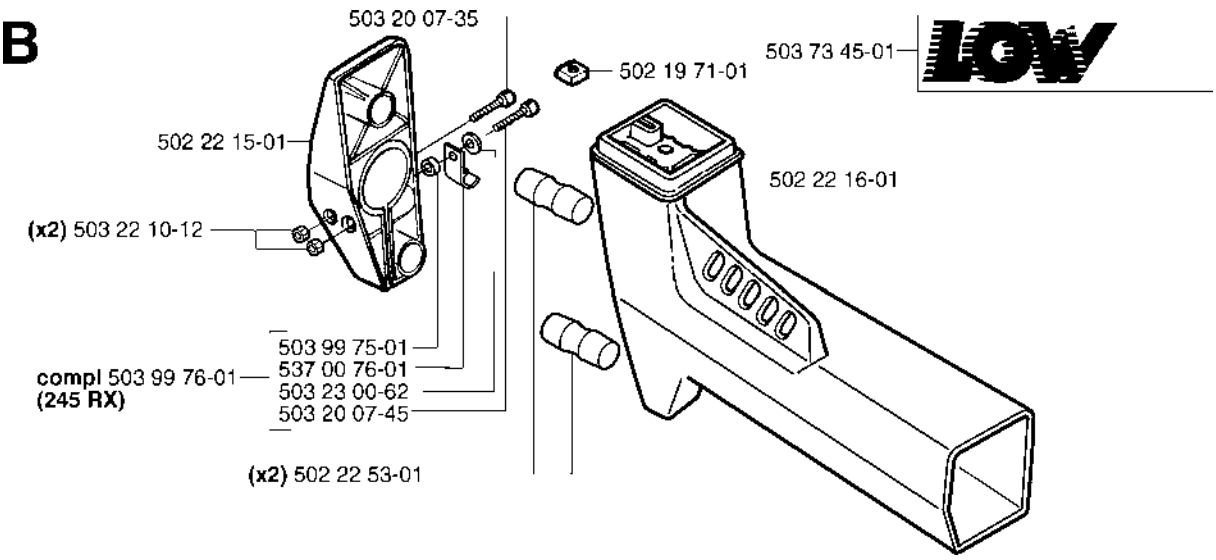
503 20 07-35
502 19 71-01
503 73 45-01
502 22 15-01
502 22 16-01
(x2) 503 22 10-12
503 99 75-01
compl 503 99 76-01
(245 RX)
537 00 76-01
503 23 00-62
503 20 07-45
(x2) 502 22 53-01

C

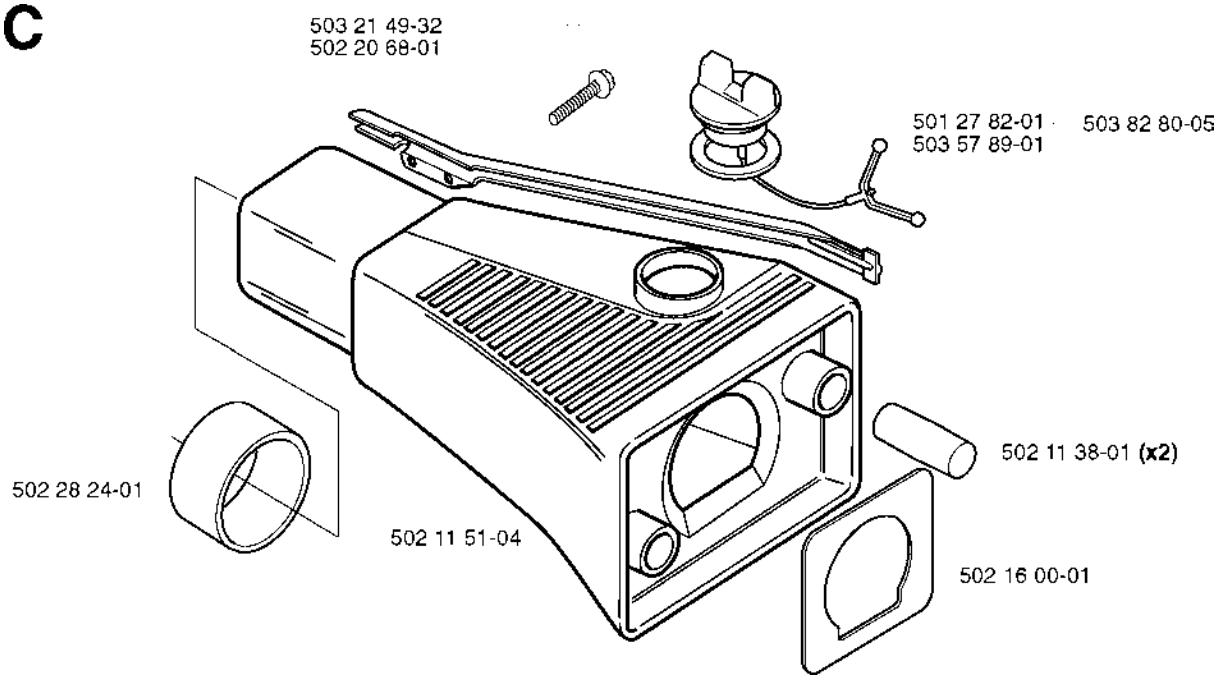
503 21 49-32
502 20 68-01
501 27 82-01
503 57 89-01
503 82 80-05
502 11 38-01 (x2)
502 28 24-01
502 11 51-04
502 16 00-01

D ***compl** 502 11 22-03
****compl** 502 12 56-02 **(EPA)**

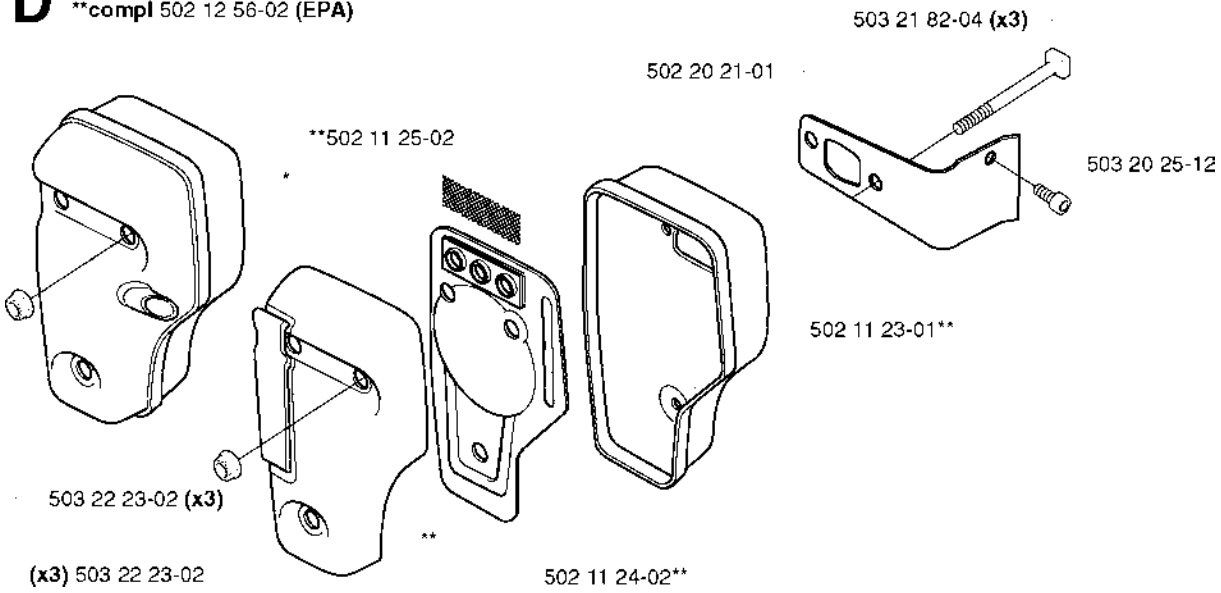

E

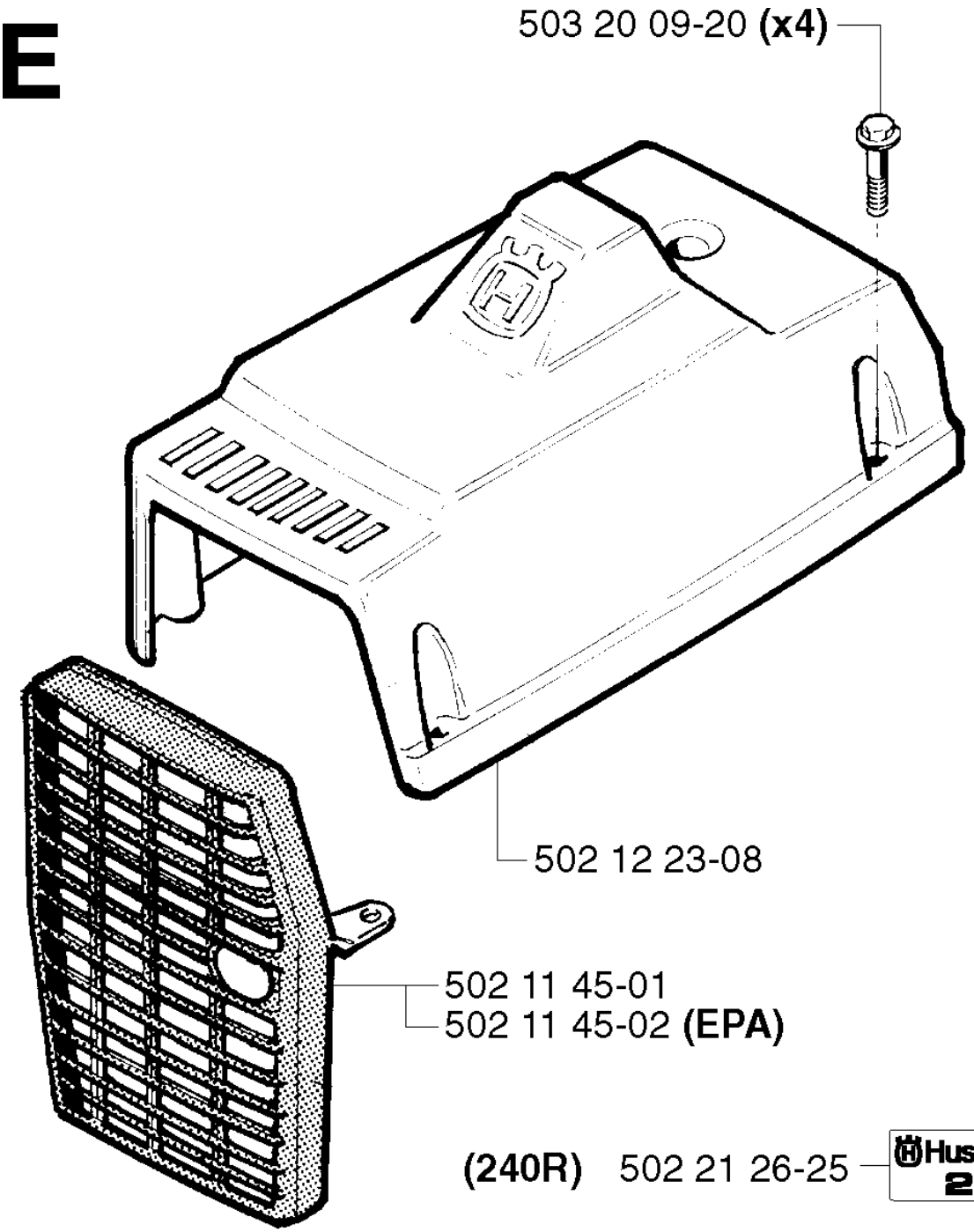

(240R) 502 21 26-25 — Husqvarna 240R

(245R) 502 21 26-26 — Husqvarna 245R

(245RX) 502 21 26-27 — Husqvarna 245RX

F *compl 506 01 06-07 (240R)
*compl 503 44 08-02 (245R, 245RX)

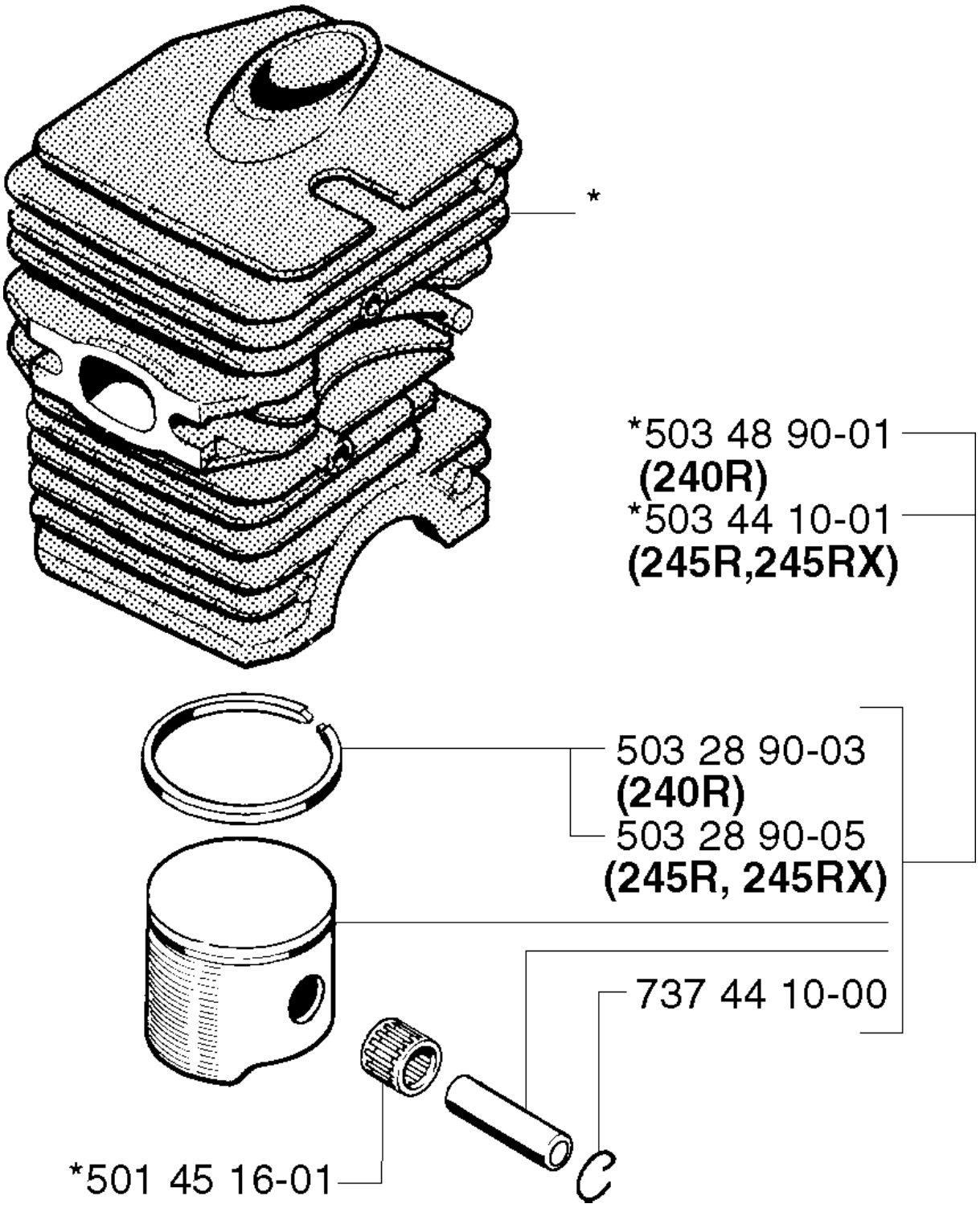

G ***compl** 503 57 38-06
****compl** 502 23 02-01

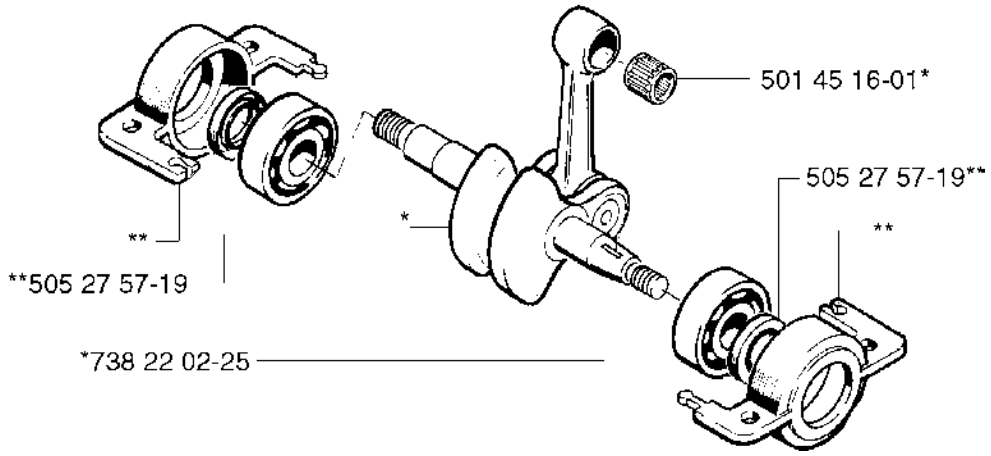

H

***compl** 502 11 52-01

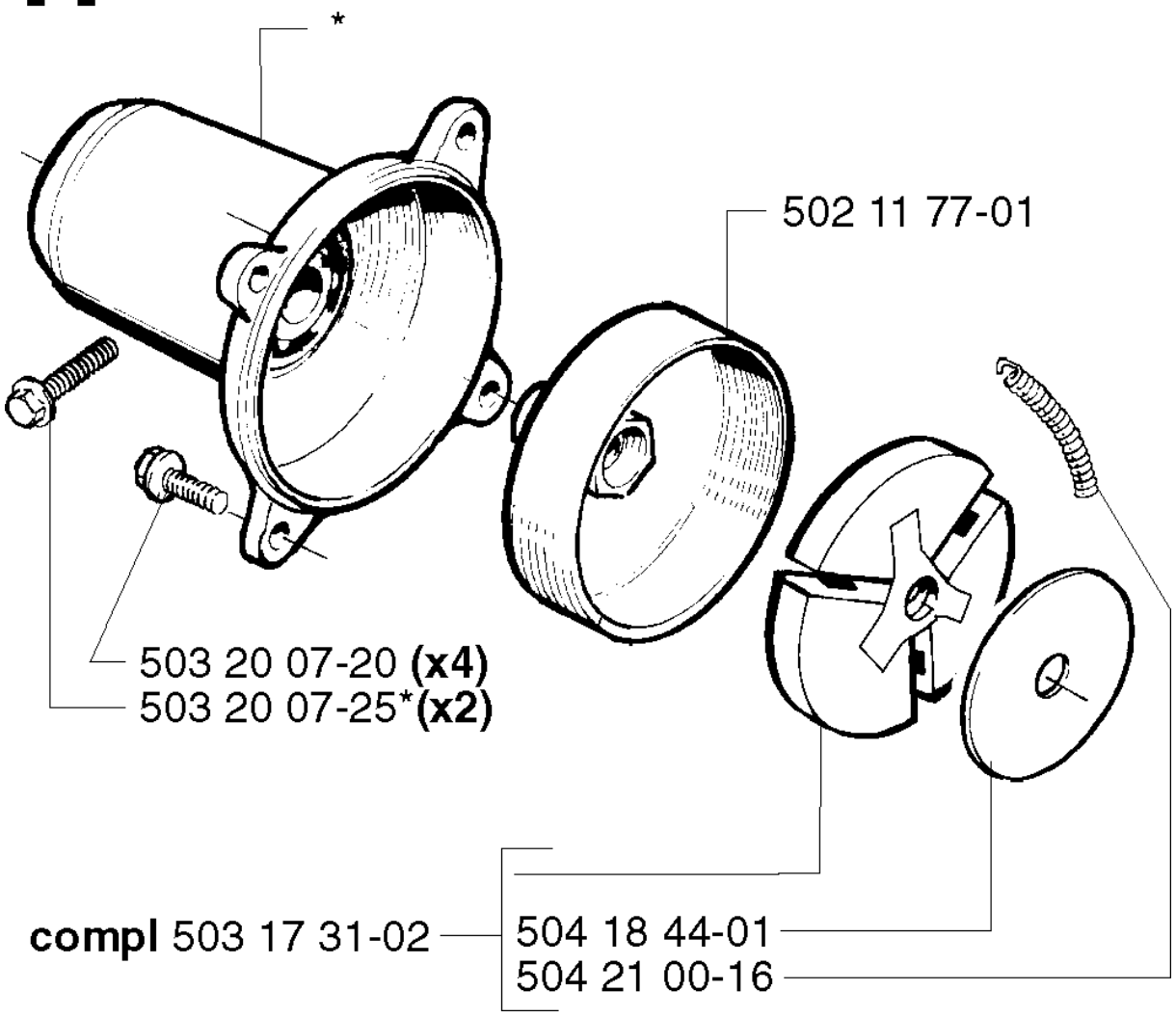

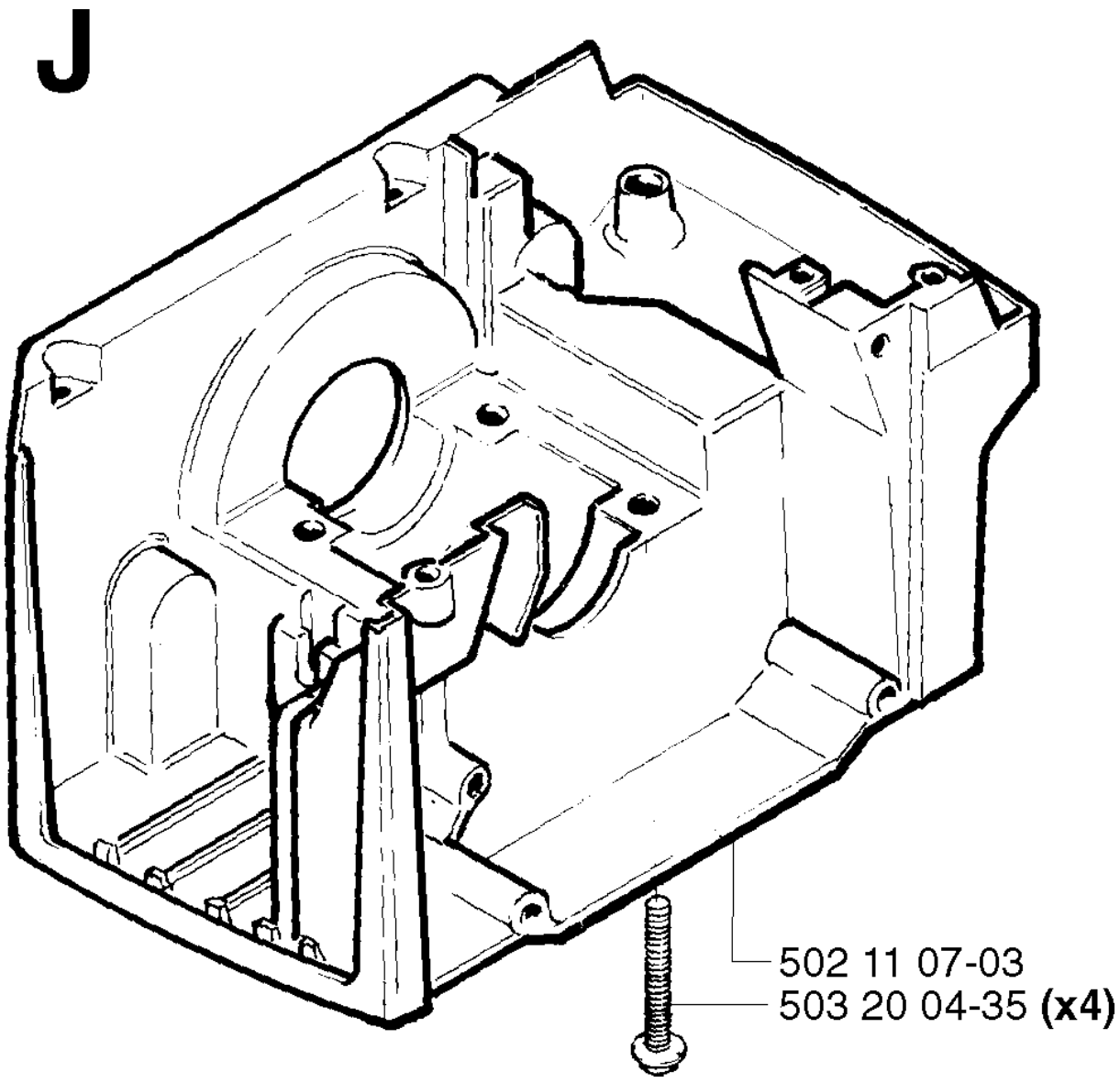
J
502 11 07-03
503 20 04-35 (x4)

K

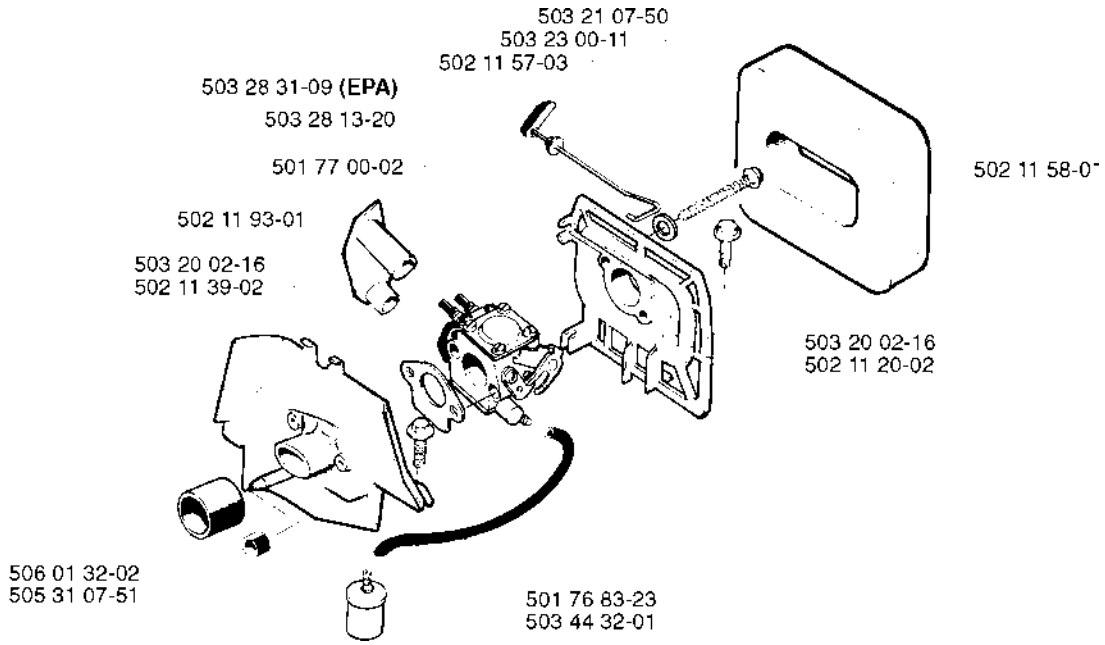
503 21 07-50
503 23 00-11
502 11 57-03
503 28 31-09 (EPA)
503 28 13-20
501 77 00-02
502 11 58-0
502 11 93-01
503 20 02-16
502 11 39-02
503 20 02-16
502 11 20-02
506 01 32-02
505 31 07-51
501 76 83-23
503 44 32-01

L ***compl** 503 79 00-02

501 48 54-02
503 84 50-01
505 27 75-16

503 23 51-08
Champion RCJ 7Y
503 23 51-11
NGK BPMR 7A

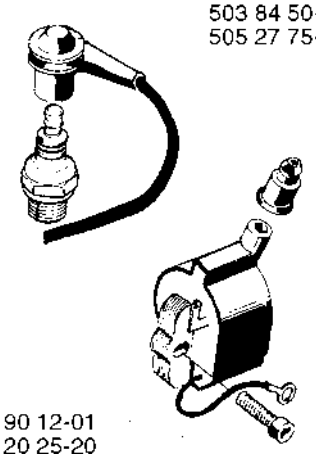

503 90 12-01
503 20 25-20

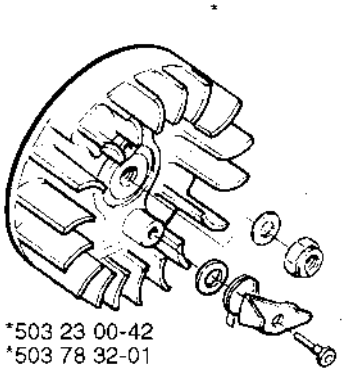

*503 23 00-42
*503 78 32-01

503 23 01-01
503 22 10-11

503 71 02-03*
501 81 99-03*

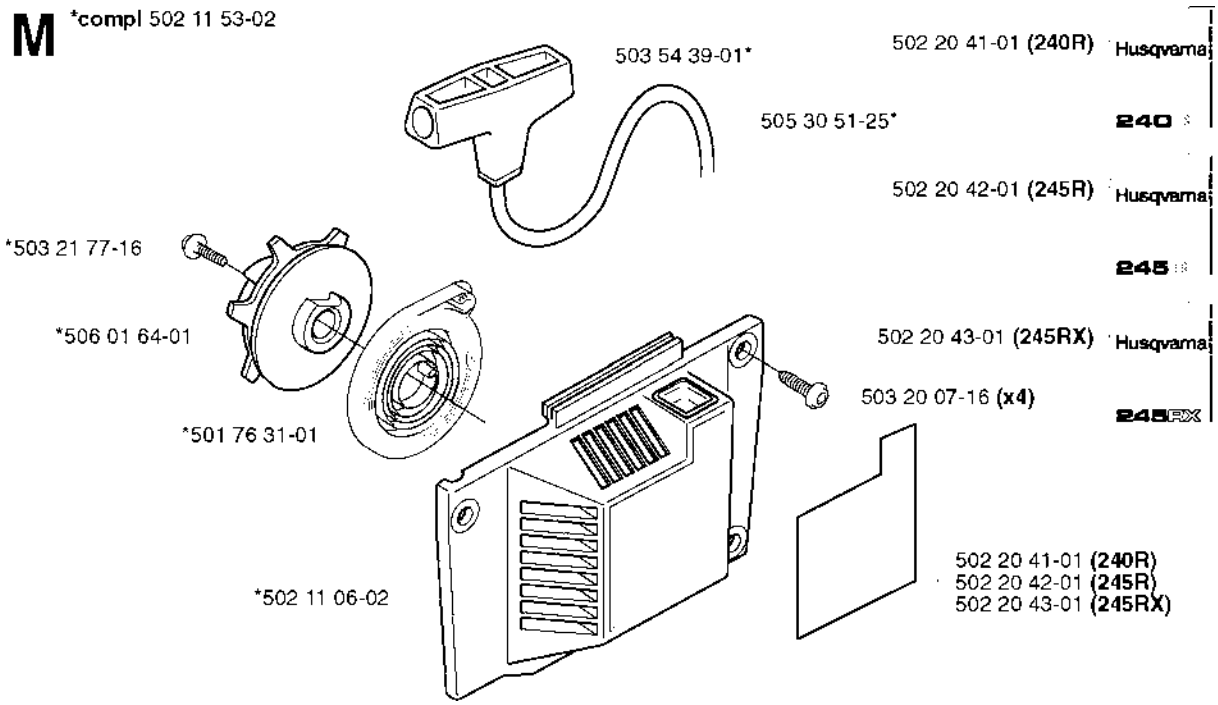
M
*compl 502 11 53-02
503 54 39-01*
505 30 51-25*
*503 21 77-16
*506 01 64-01
*501 76 31-01
*502 11 06-02
503 20 07-16 (x4)
502 20 41-01 (240R) Husqvarna 240
502 20 42-01 (245R) Husqvarna 245
502 20 43-01 (245RX) Husqvarna 245RX
502 20 41-01 (240R)
502 20 42-01 (245R)
502 20 43-01 (245RX)

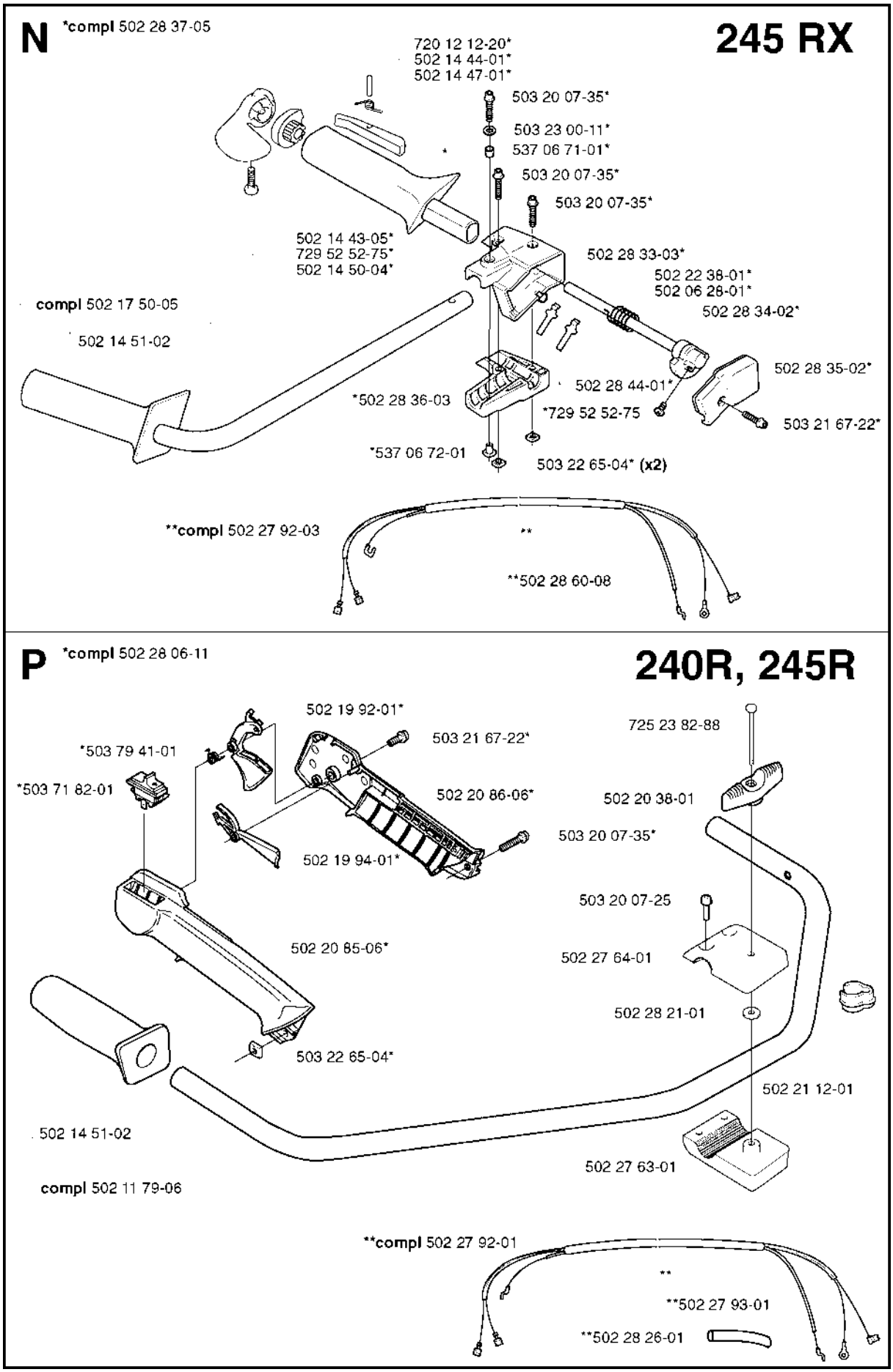
N
*compl 502 28 37-05
245 RX
720 12 12-20*
502 14 44-01*
502 14 47-01*
503 20 07-35*
503 23 00-11*
537 06 71-01*
503 20 07-35*
503 20 07-35*
502 14 43-05*
729 52 52-75*
502 14 50-04*
502 28 33-03*
502 22 38-01*
502 06 28-01*
502 28 34-02*
compl 502 17 50-05
502 14 51-02
502 28 35-02*
502 28 44-01*
*502 28 36-03
*729 52 52-75
503 21 67-22*
*537 06 72-01
503 22 65-04* (x2)
**compl 502 27 92-03
**
**502 28 60-08
P
*compl 502 28 06-11
240R, 245R
502 19 92-01*
503 21 67-22*
*503 79 41-01
*503 71 82-01
502 20 86-06*
502 19 94-01*
725 23 82-88
502 20 38-01
503 20 07-35*
503 20 07-25
502 20 85-06*
502 27 64-01
502 28 21-01
503 22 65-04*
502 21 12-01
502 14 51-02
502 27 63-01
compl 502 11 79-06
**compl 502 27 92-01
**
**502 27 93-01
**502 28 26-01

Q * **compl** 503 28 13-20

Walbro WT 99

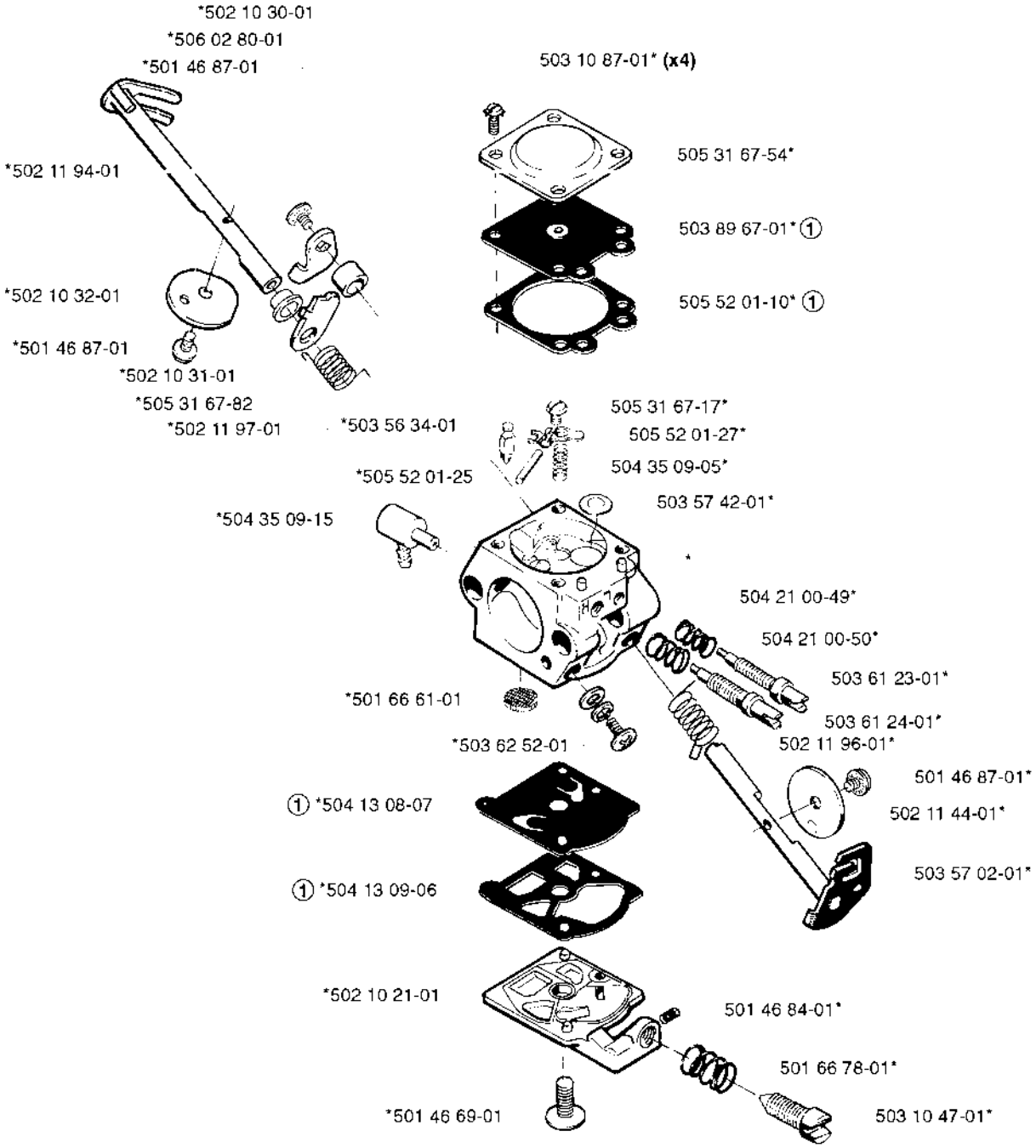

① 502 10 35-01
Set of gaskets
Dichtungssatz
Juego de juntas
Jeu de joints
Packningssats

R **compl** 503 28 31-09

ZAMA C1Q - EL 10 (EPA)

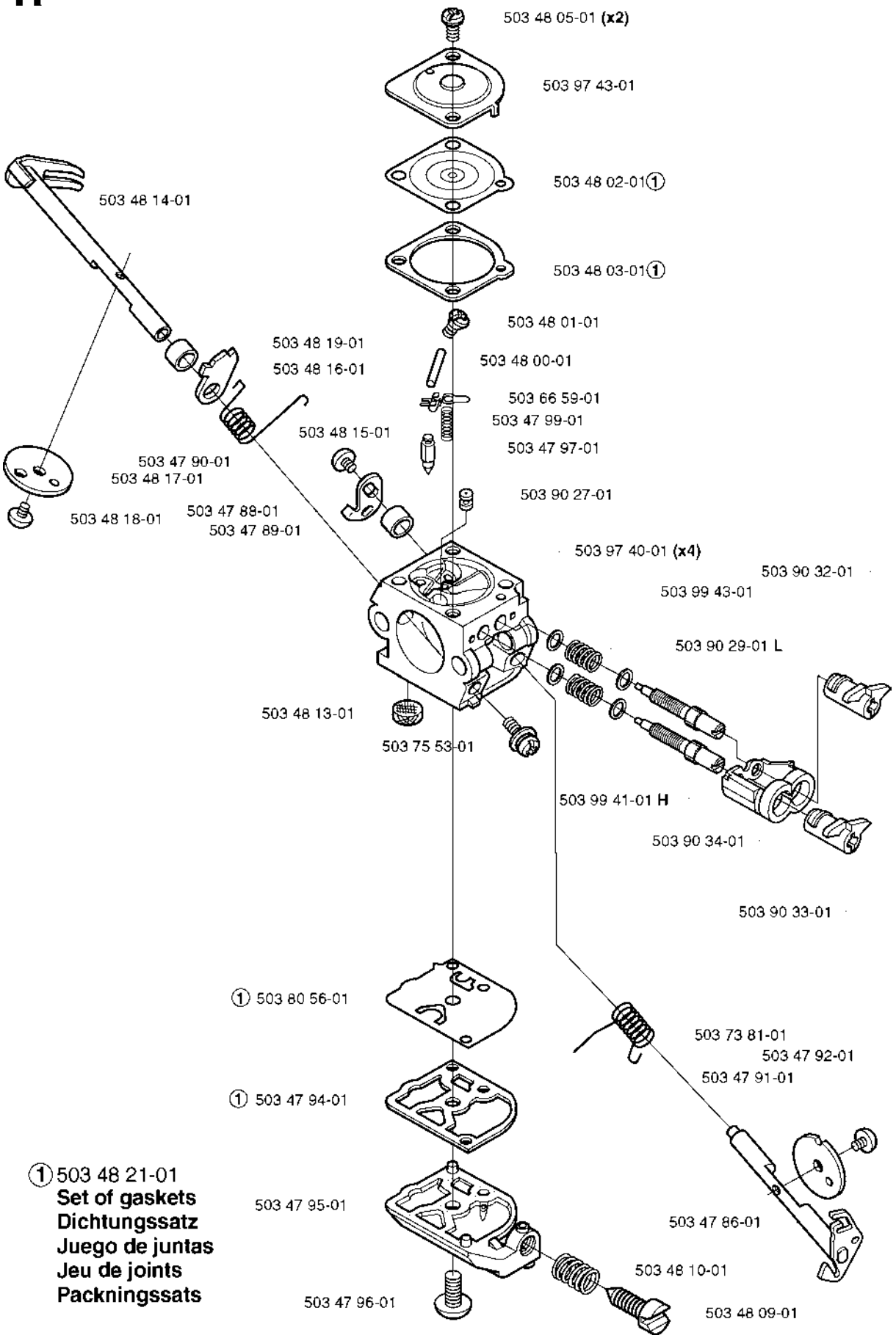

① 503 48 21-01
Set of gaskets
Dichtungssatz
Juego de juntas
Jeu de joints
Packningssats

S Accessories
Zubehöre
Accessoires
Accessorios
Tillbehör

*compl 502 27 33-03

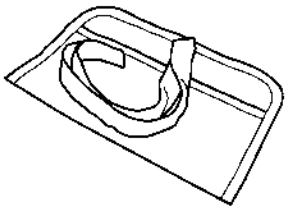

501 19 22-01*

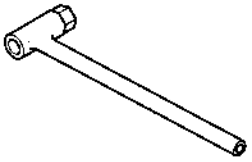

*501 69 17-01

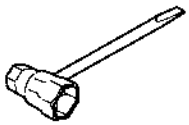

501 60 02-03*

*502 21 58-01

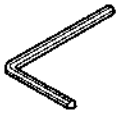

502 11 46-02*

*502 28 59-01

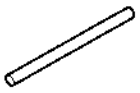

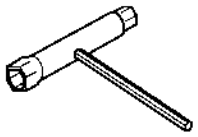

501 68 89-01

Olja Luftfilter
Oil Airfilter
Öl Luftfilter
Aceite Filtro Air
Huile Filtera aire

1,0 lit.

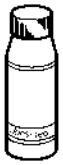

531 00 60-76

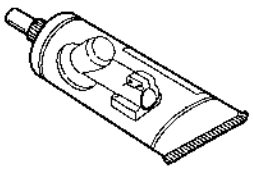

503 97 64-01

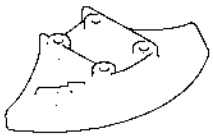

502 27 22-01 **(200 mm)**
502 03 94-03 **(225 mm)**

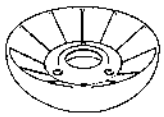

502 15 70-01

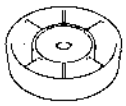

503 90 18-01

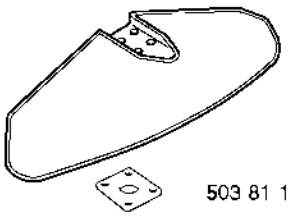

503 81 15-01

compl 502 26 34-01

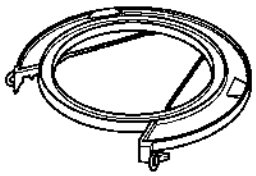

502 03 55-05 **(200-250 mm)**



503 74 29-01

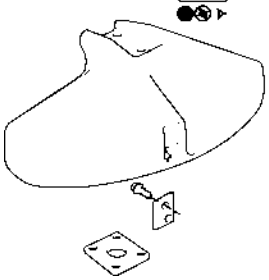

503 21 07-16
503 79 88-01

compl 503 91 60-01

503 81 15-01

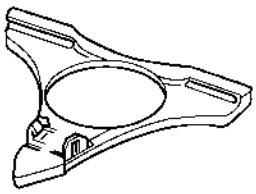

502 26 23-01

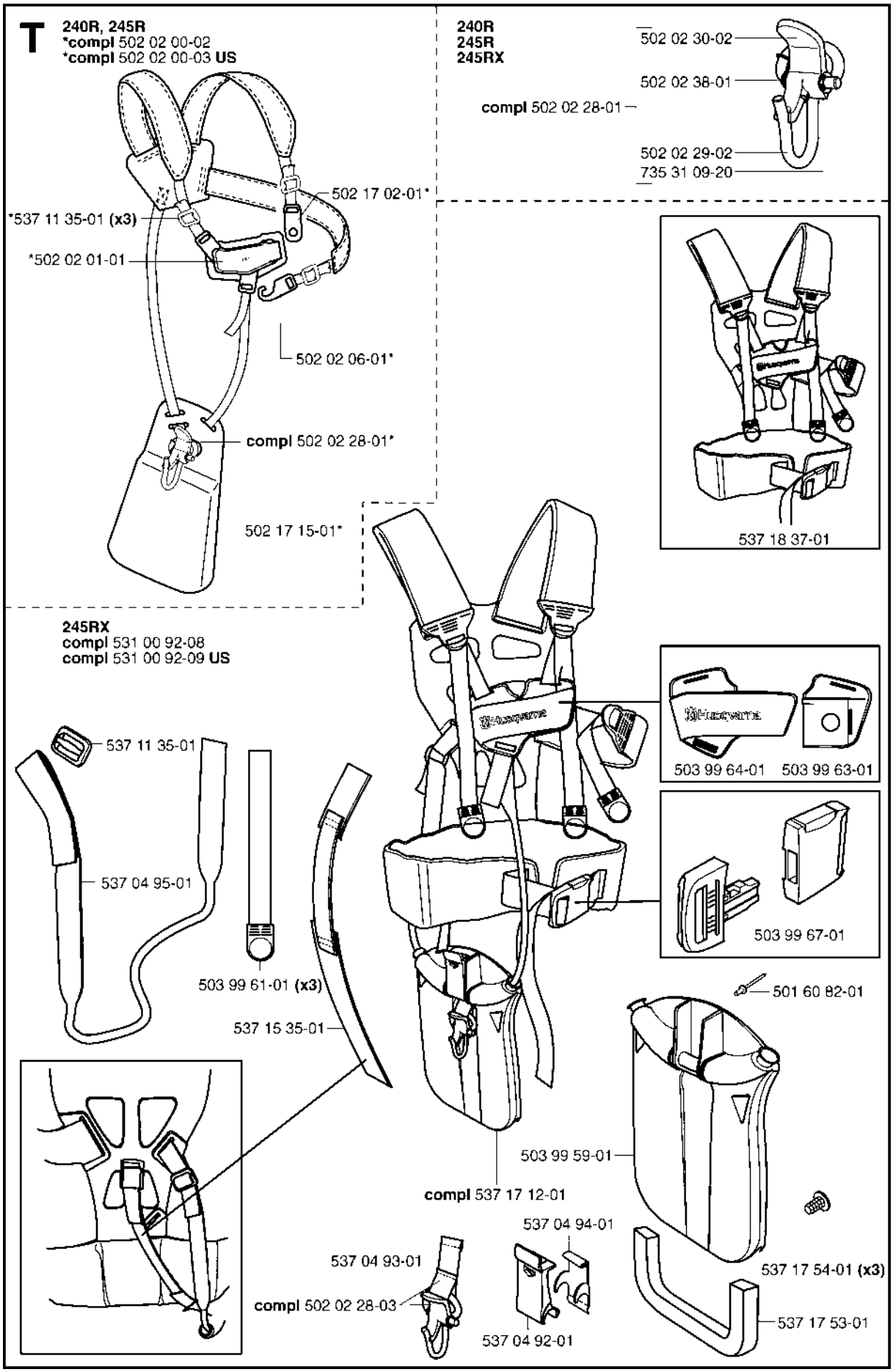
T
240R, 245R
*compl 502 02 00-02
*compl 502 02 00-03 US
*537 11 35-01 (x3)
*502 02 01-01
502 17 02-01*
502 02 06-01*
compl 502 02 28-01*
502 17 15-01*
240R
245R
245RX
502 02 30-02
502 02 38-01
compl 502 02 28-01
502 02 29-02
735 31 09-20
537 18 37-01
245RX
compl 531 00 92-08
compl 531 00 92-09 US
503 99 64-01
503 99 63-01
503 99 67-01
537 11 35-01
537 04 95-01
503 99 61-01 (x3)
537 15 35-01
501 60 82-01
503 99 59-01
compl 537 17 12-01
537 04 94-01
537 04 93-01
compl 502 02 28-03
537 04 92-01
537 17 54-01 (x3)
537 17 53-01