Husqvarna
240 R (1996-06)

Rozkres je dokumentace výrobce (© příslušný výrobce) a slouží k identifikaci dílů. Pro výběr dílu se vždy řiďte katalogovým číslem.

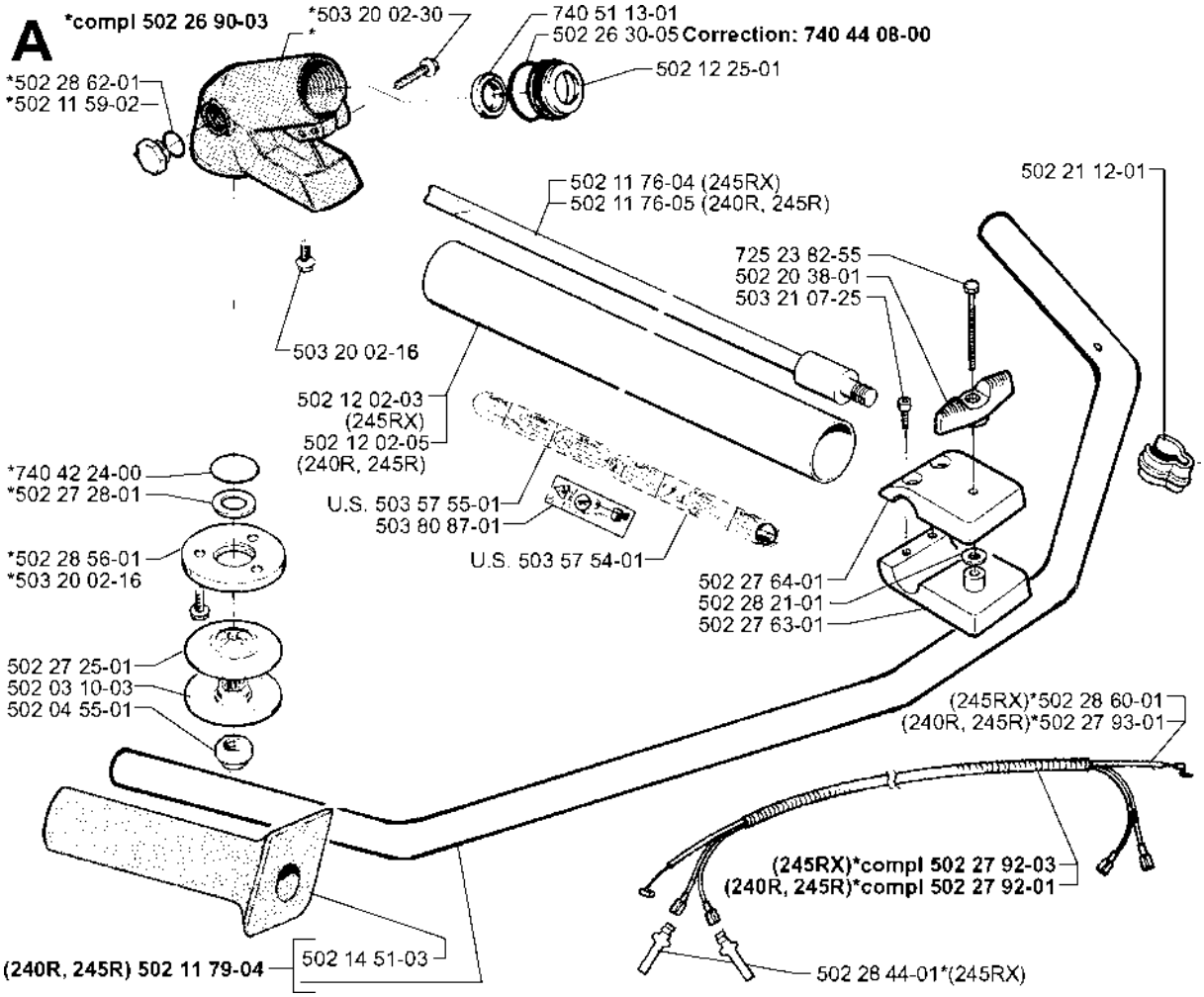
A
*compl 502 26 90-03
*503 20 02-30
740 51 13-01
502 26 30-05 Correction: 740 44 08-00
502 12 25-01
*502 28 62-01
*502 11 59-02
502 11 76-04 (245RX)
502 11 76-05 (240R, 245R)
502 21 12-01
725 23 82-55
502 20 38-01
503 21 07-25
503 20 02-16
502 12 02-03 (245RX)
502 12 02-05 (240R, 245R)
*740 42 24-00
*502 27 28-01
U.S. 503 57 55-01
503 80 87-01
U.S. 503 57 54-01
*502 28 56-01
*503 20 02-16
502 27 64-01
502 28 21-01
502 27 63-01
502 27 25-01
502 03 10-03
502 04 55-01
(245RX)*502 28 60-01
(240R, 245R)*502 27 93-01
(245RX)*compl 502 27 92-03
(240R, 245R)*compl 502 27 92-01
(240R, 245R) 502 11 79-04
502 14 51-03
502 28 44-01*(245RX)

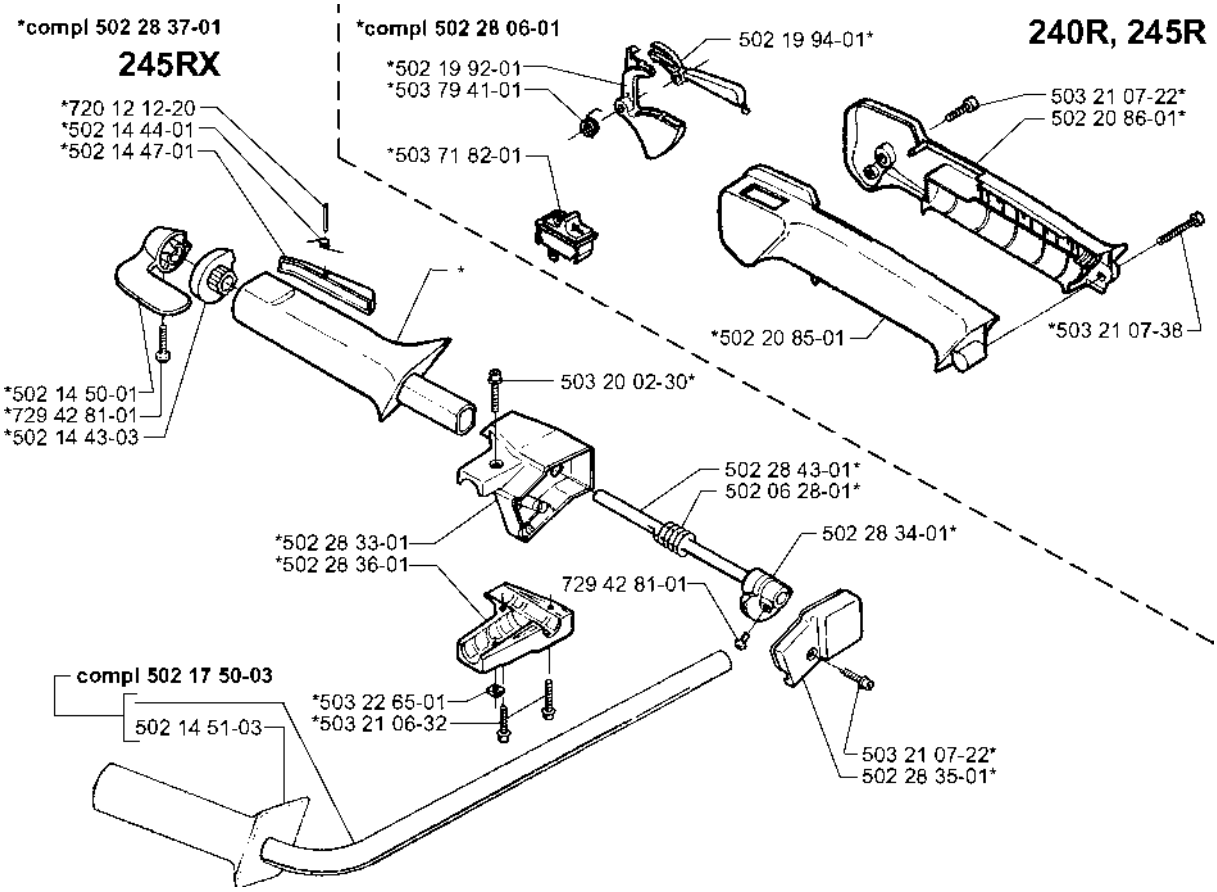
*compl 502 28 37-01
245RX
*compl 502 28 06-01
240R, 245R
502 19 94-01*
*502 19 92-01
*503 79 41-01
*720 12 12-20
*502 14 44-01
*502 14 47-01
*503 71 82-01
503 21 07-22*
502 20 86-01*
*502 20 85-01
*503 21 07-38
*502 14 50-01
*729 42 81-01
*502 14 43-03
503 20 02-30*
502 28 43-01*
502 06 28-01*
*502 28 33-01
*502 28 36-01
502 28 34-01*
729 42 81-01
compl 502 17 50-03
*503 22 65-01
*503 21 06-32
502 14 51-03
503 21 07-22*
502 28 35-01*

H

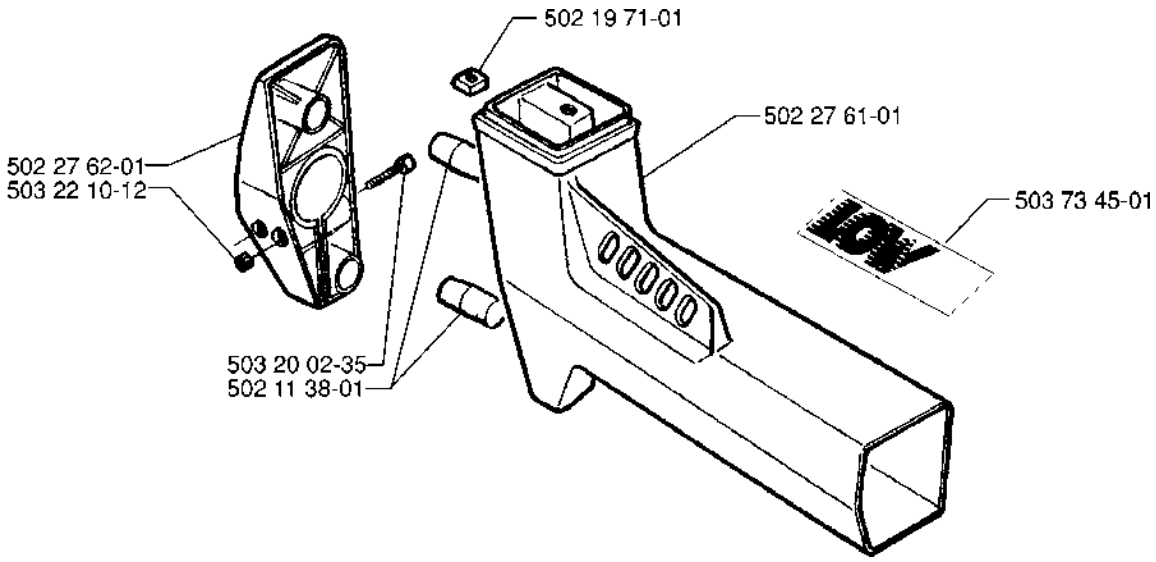
502 19 71-01
502 27 61-01
502 27 62-01
503 22 10-12
503 73 45-01
503 20 02-35
502 11 38-01

J

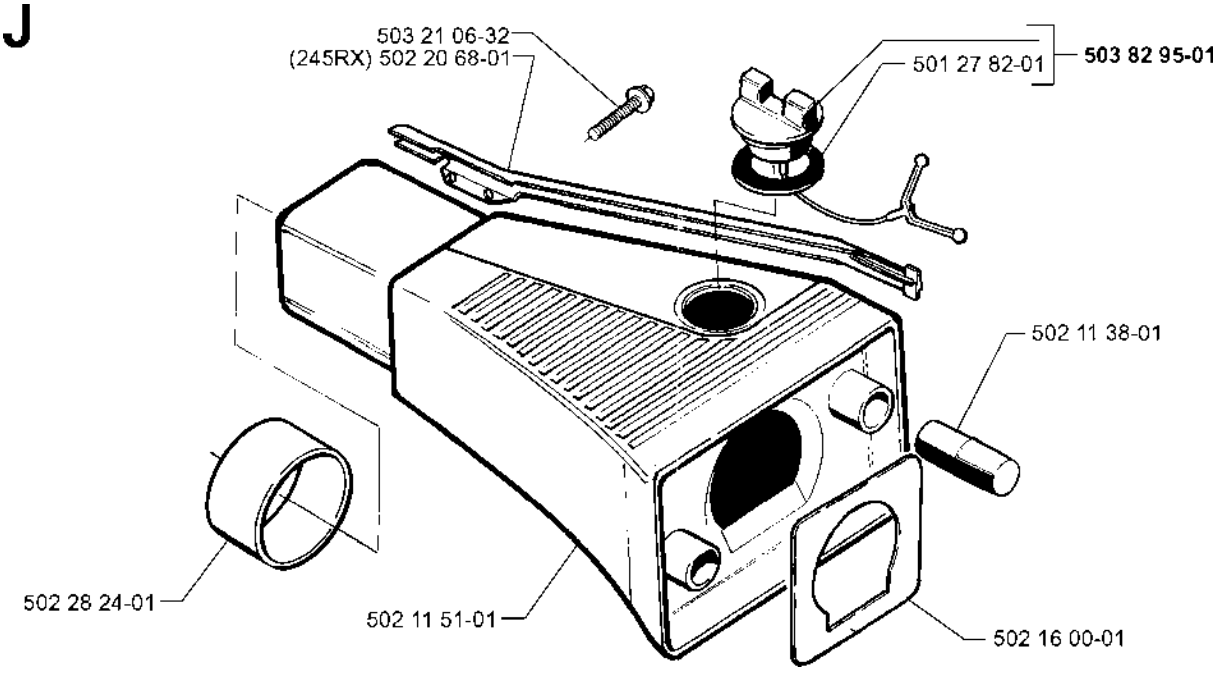
503 21 06-32
(245RX) 502 20 68-01
501 27 82-01
503 82 95-01
502 11 38-01
502 28 24-01
502 11 51-01
502 16 00-01

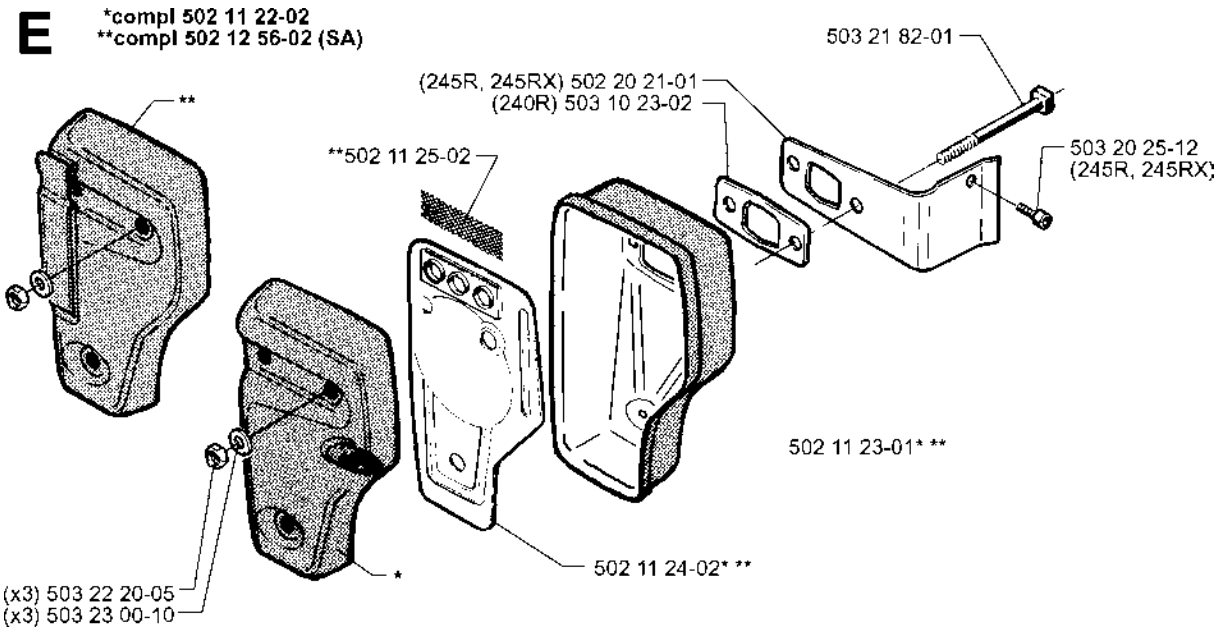
E
*compl 502 11 22-02
**compl 502 12 56-02 (SA)
503 21 82-01
(245R, 245RX) 502 20 21-01
(240R) 503 10 23-02
503 20 25-12
(245R, 245RX)
**
**502 11 25-02
502 11 23-01* **
502 11 24-02* **
*
(x3) 503 22 20-05
(x3) 503 23 00-10

D

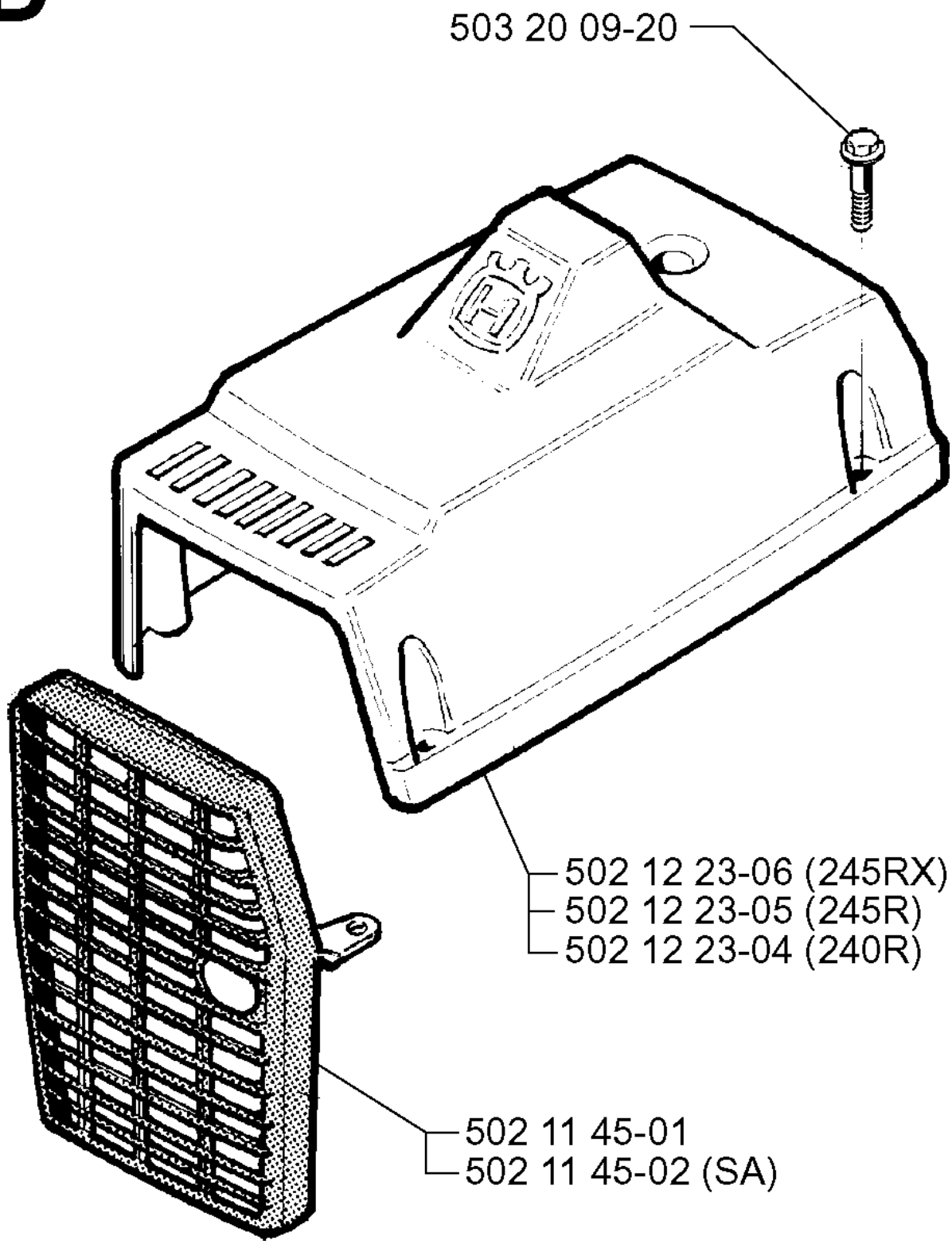
503 20 09-20
502 12 23-06 (245RX)
502 12 23-05 (245R)
502 12 23-04 (240R)
502 11 45-01
502 11 45-02 (SA)

B

***compl 506 01 06-07 (240R)**
***compl 503 44 08-02 (245R, 245RX)**

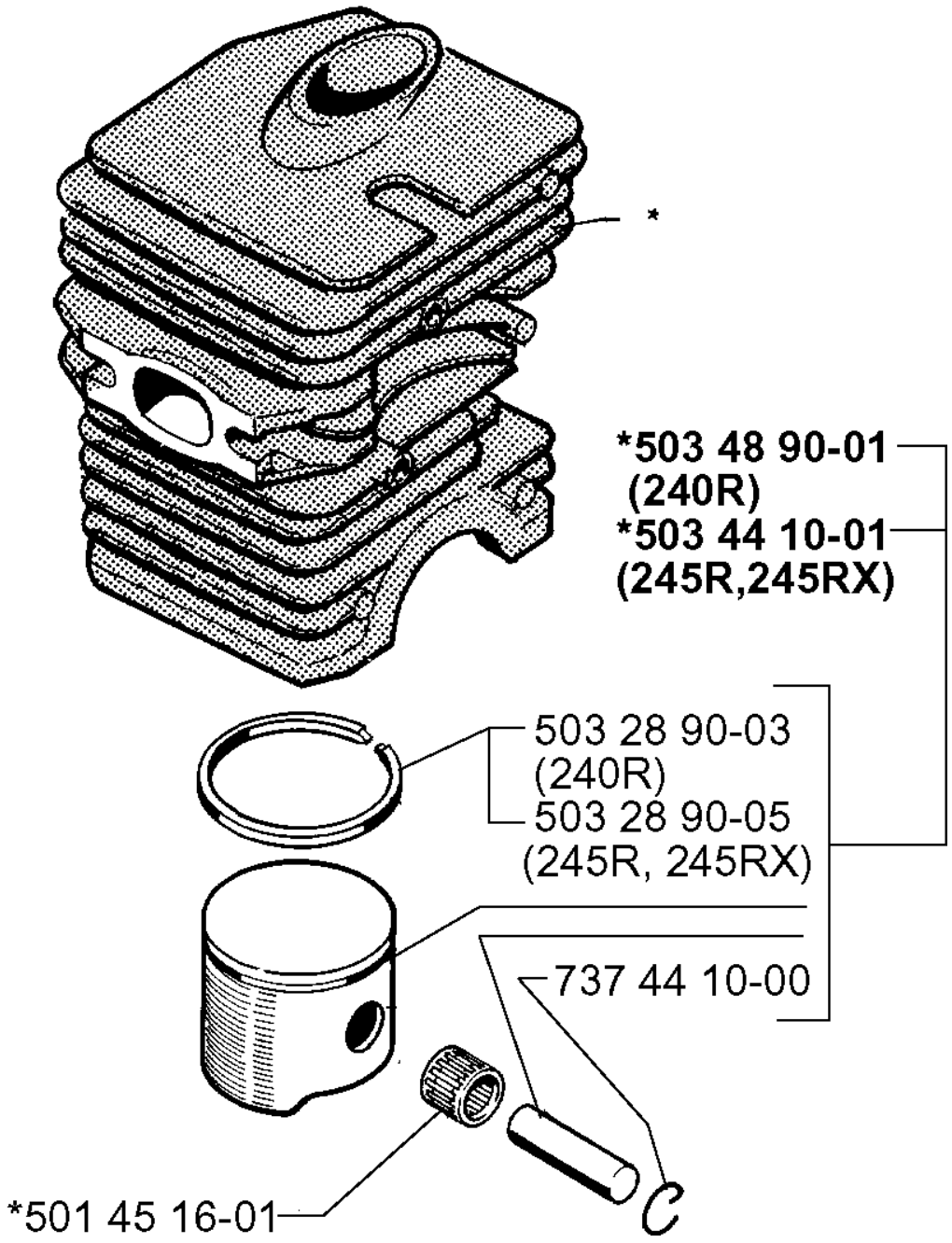

F ***compl 503 57 38-02**
****compl 502 12 21-02**

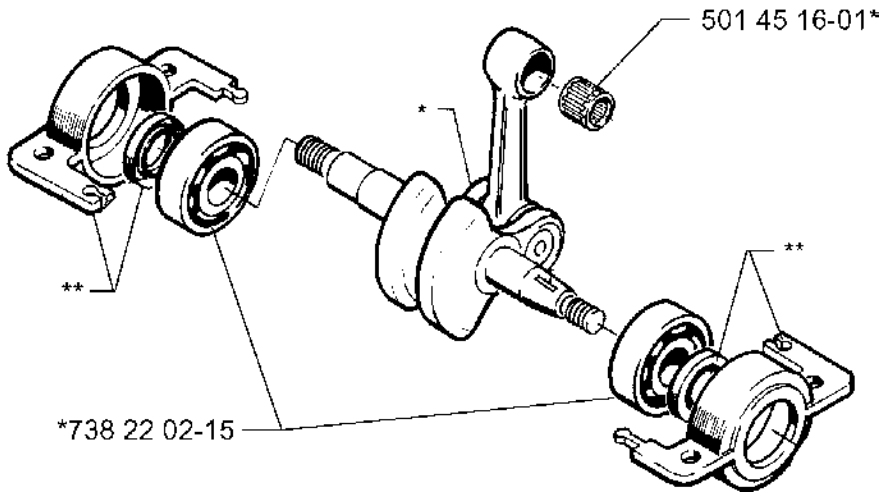

K ***compl 502 11 52-01**

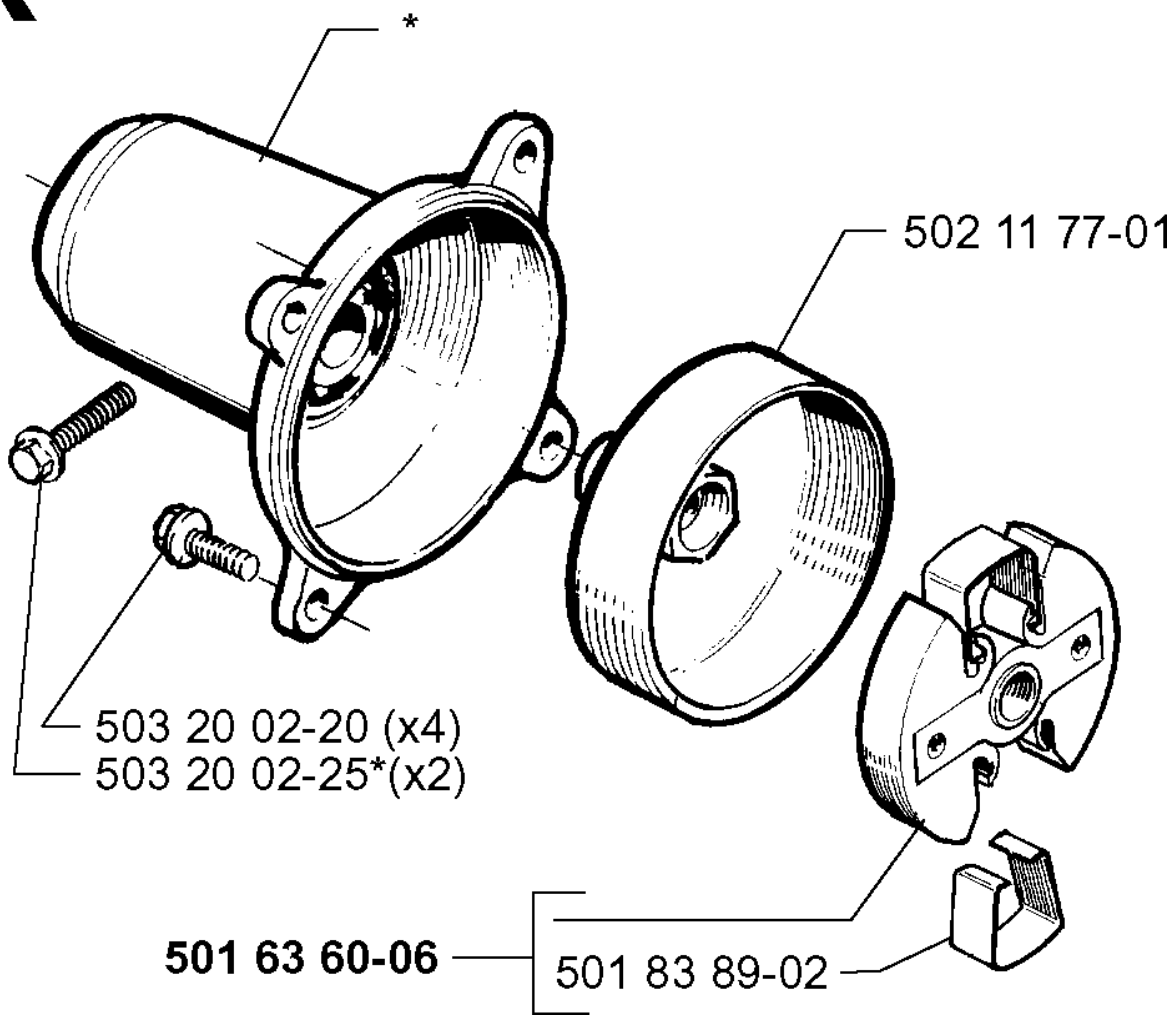

L

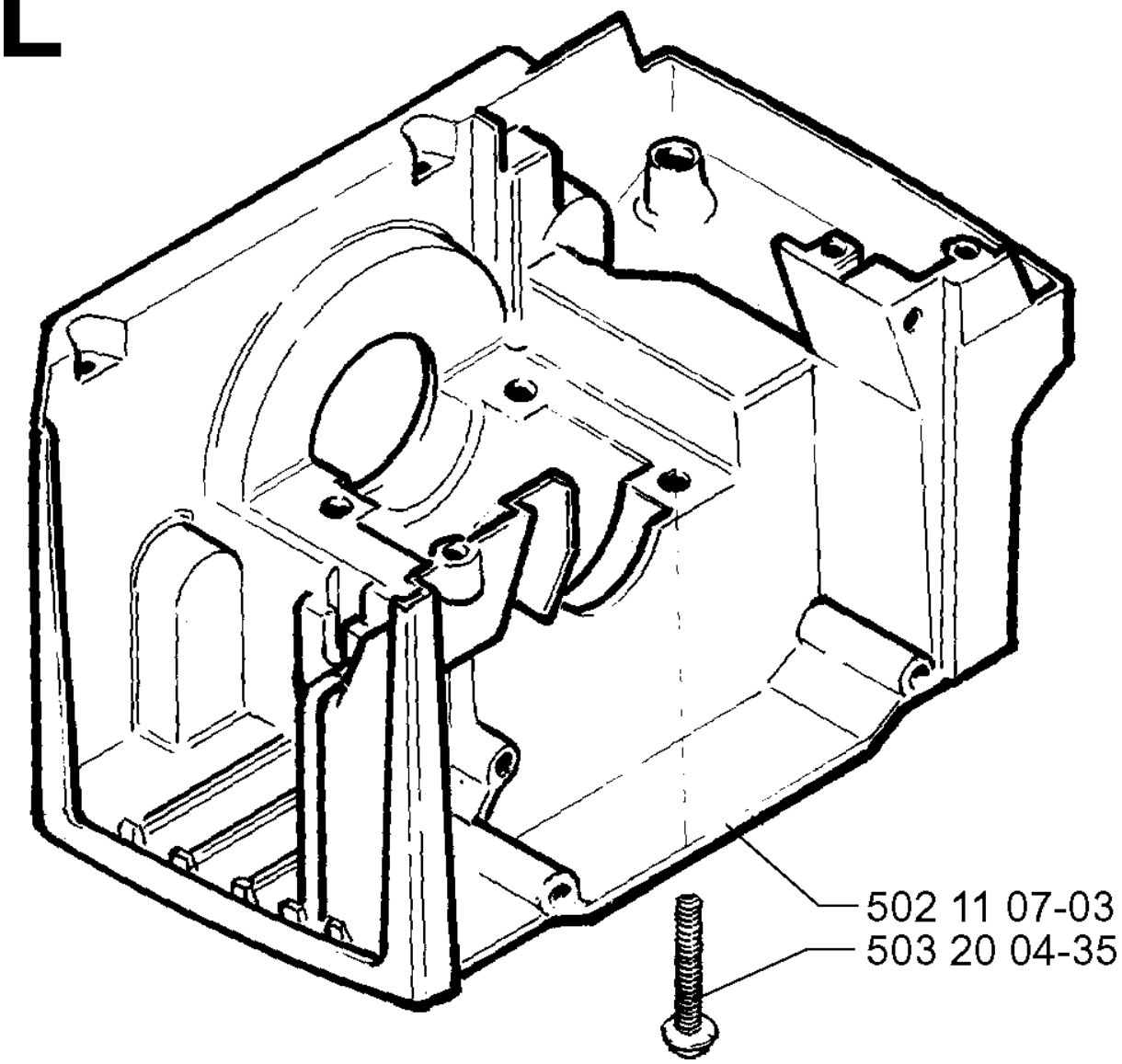

C

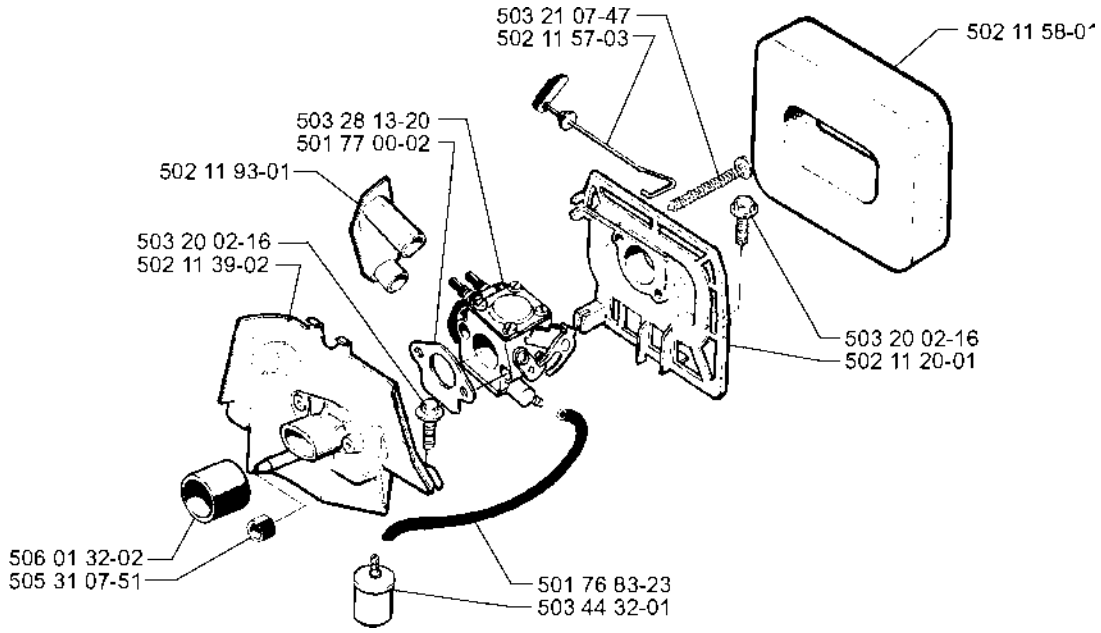
503 21 07-47
502 11 57-03
502 11 58-01
503 28 13-20
501 77 00-02
502 11 93-01
503 20 02-16
502 11 39-02
503 20 02-16
502 11 20-01
506 01 32-02
505 31 07-51
501 76 83-23
503 44 32-01

G *compl 503 79 00-02

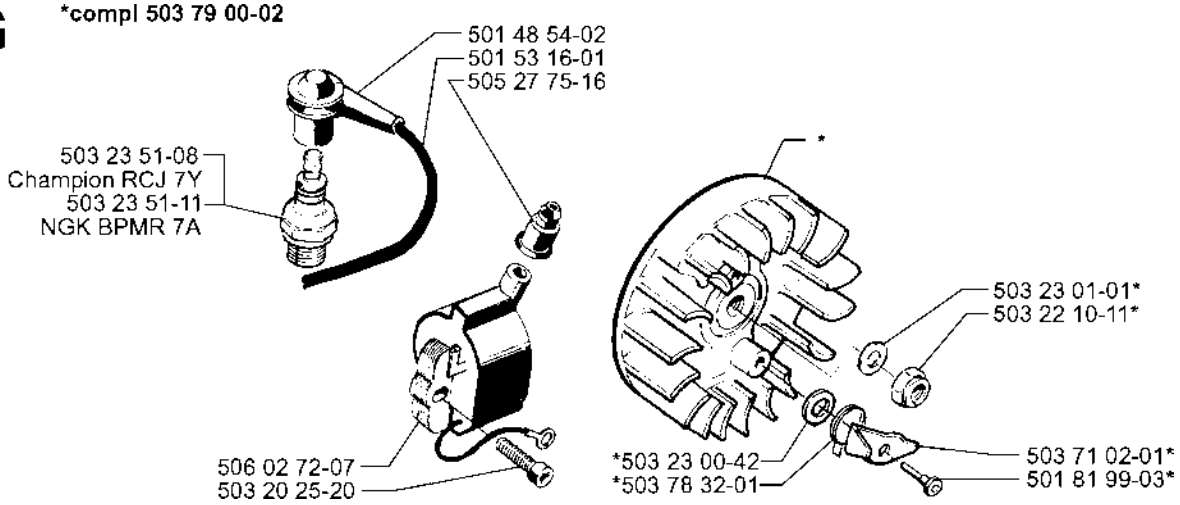

M *compl 502 11 53-02

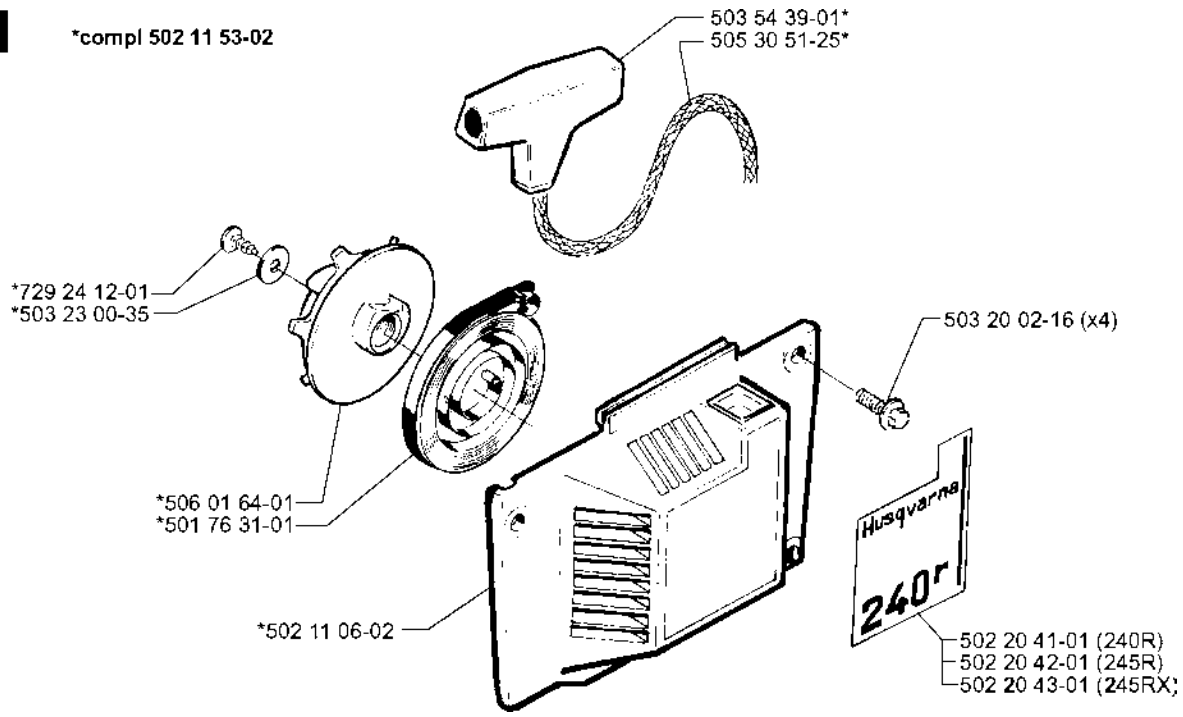

N *compl 503 28 13-20

Walbro WT 99

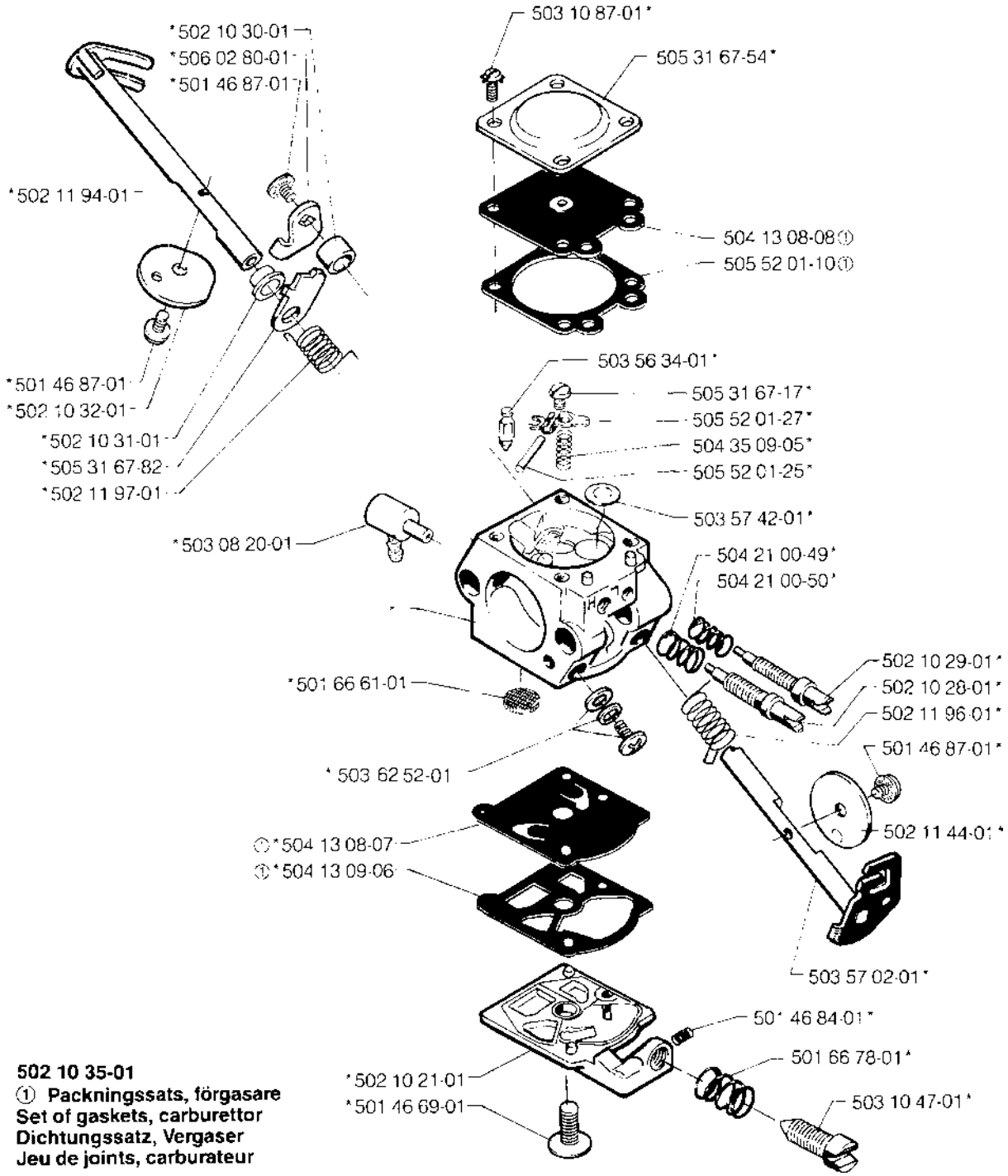

502 10 35-01
① **Packningssats, förgasare**
Set of gaskets, carburettor
Dichtungssatz, Vergaser
Jeu de joints, carburateur

O

Accessories
Zubehöre
Accessoires
Accessorios
Tillbehör

