Husqvarna

235 R (2007-01)

Rozkres je dokumentace výrobce (© příslušný výrobce) a slouží k identifikaci dílů. Pro výběr dílu se vždy řiďte katalogovým číslem.

V ACCESSORIES

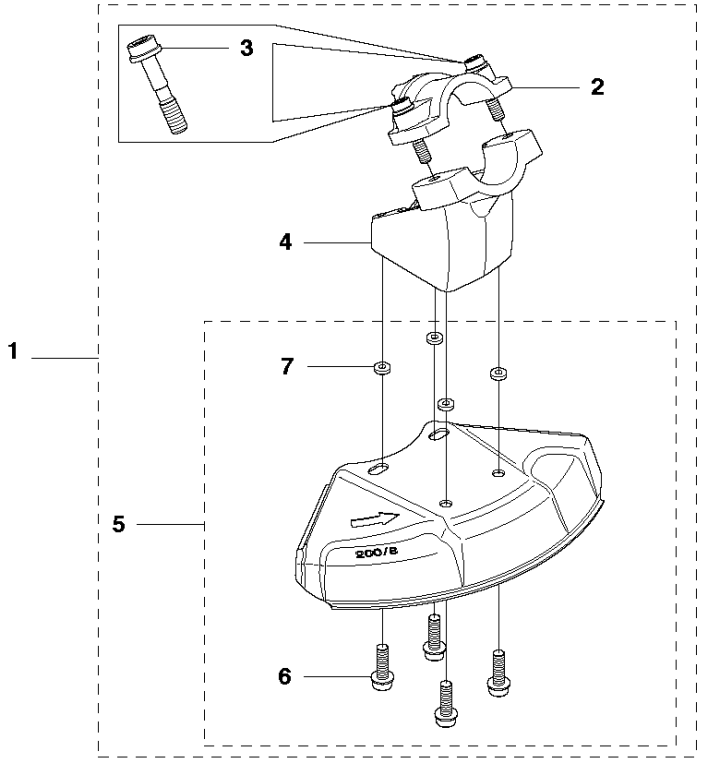

A 235FR, 235R, 235RII

***compl** 544 21 64-01

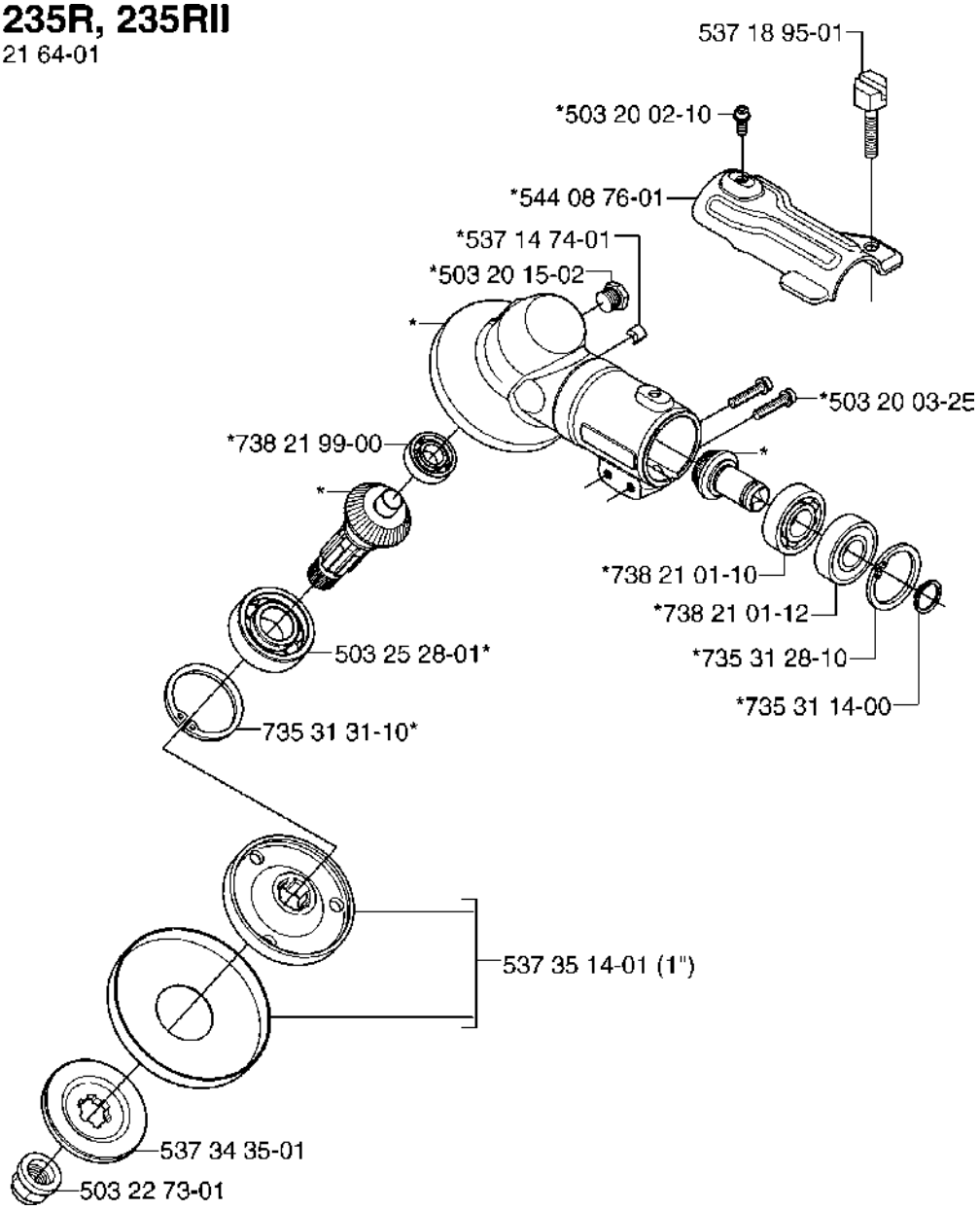

B 235FR, 235R, 235RII

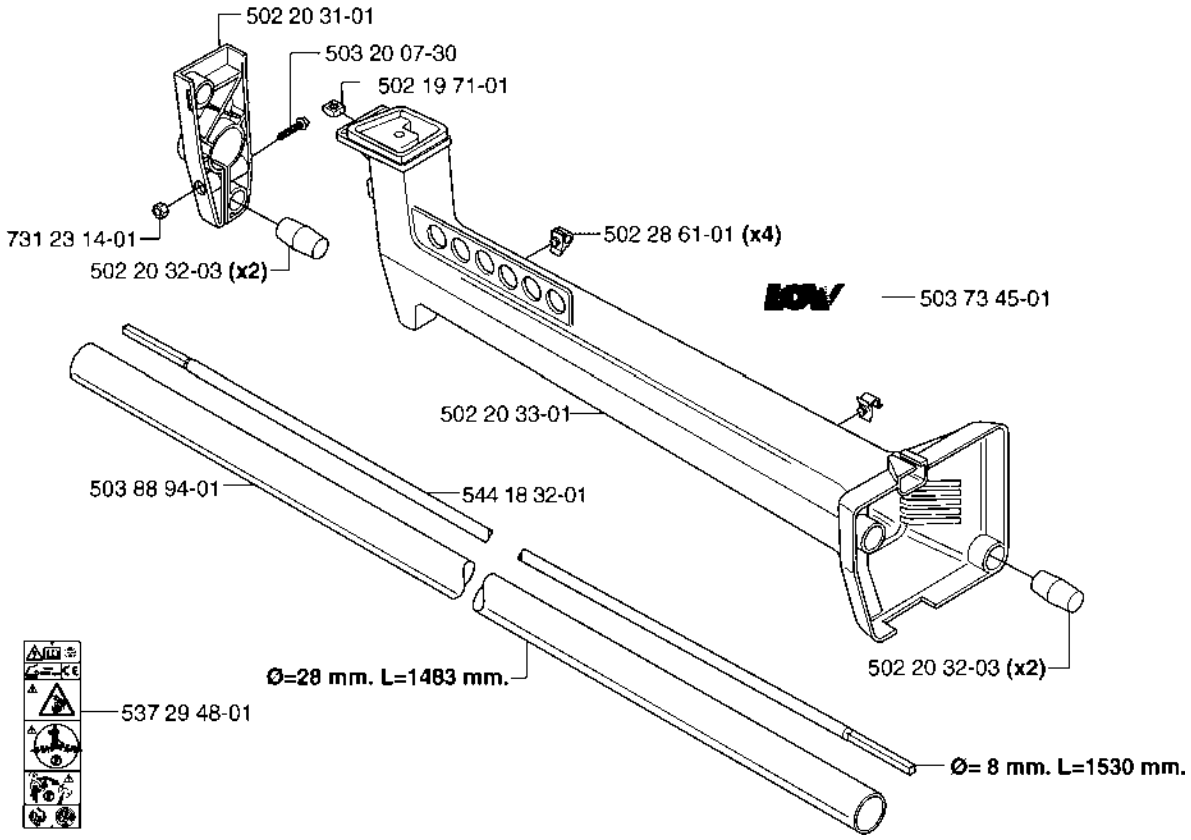

B 232L, 232R

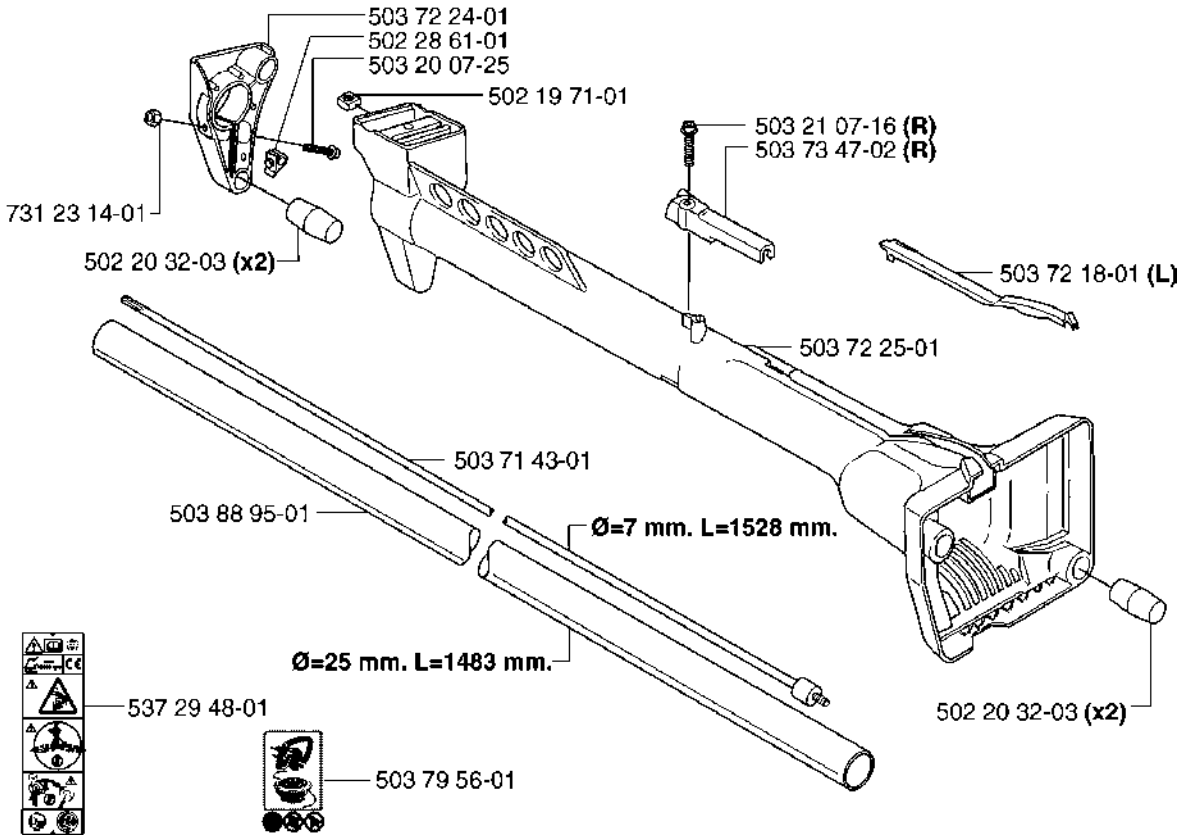
503 72 24-01
502 28 61-01
503 20 07-25
502 19 71-01
503 21 07-16 (R)
503 73 47-02 (R)
731 23 14-01
502 20 32-03 (x2)
503 72 18-01 (L)
503 72 25-01
503 71 43-01
503 88 95-01
Ø=7 mm. L=1528 mm.
Ø=25 mm. L=1483 mm.
537 29 48-01
503 79 56-01
502 20 32-03 (x2)

C 235FR, 235R, 235RII

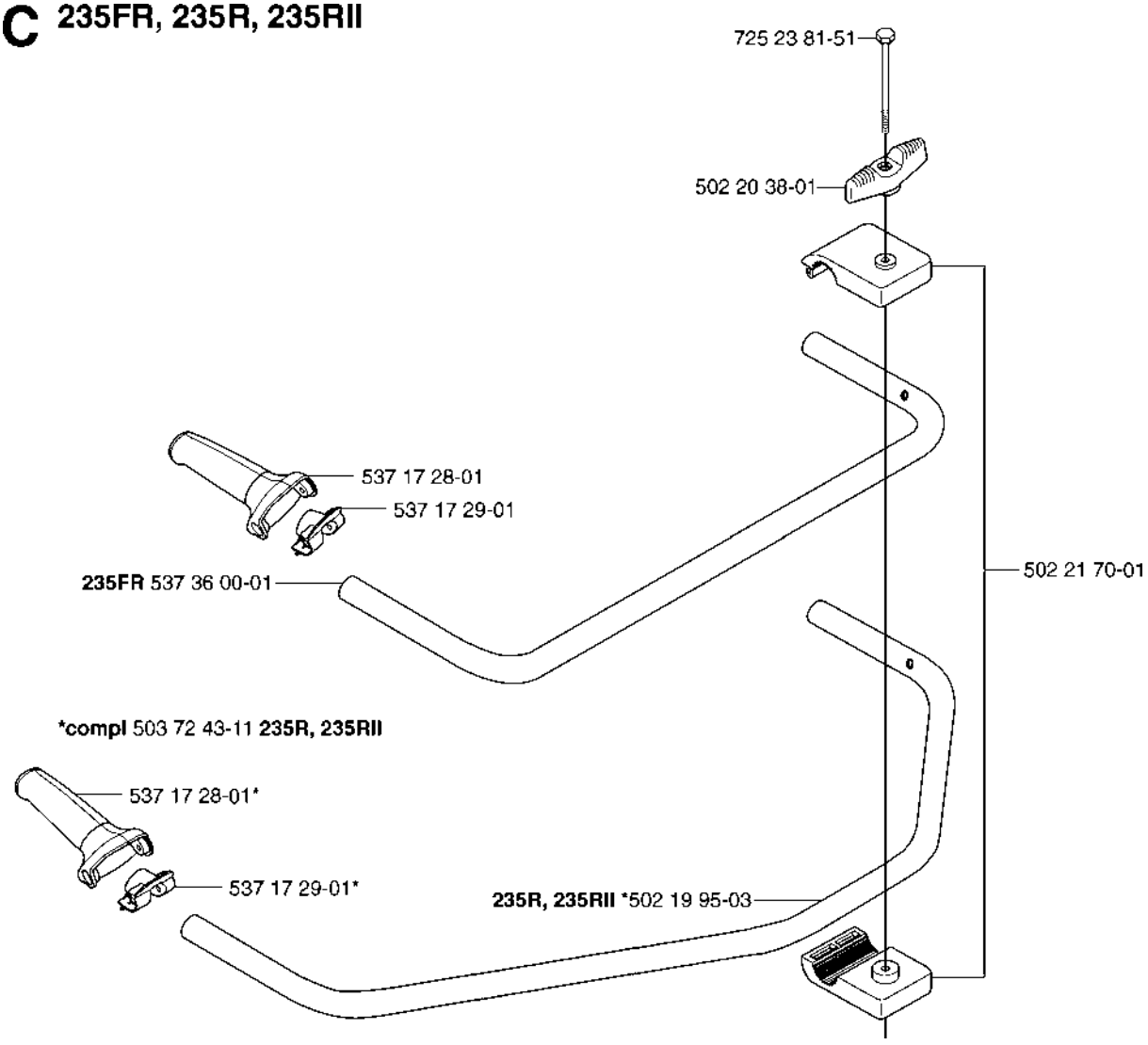

D 235FR, 235R, 235RII
***compl** 537 18 35-07

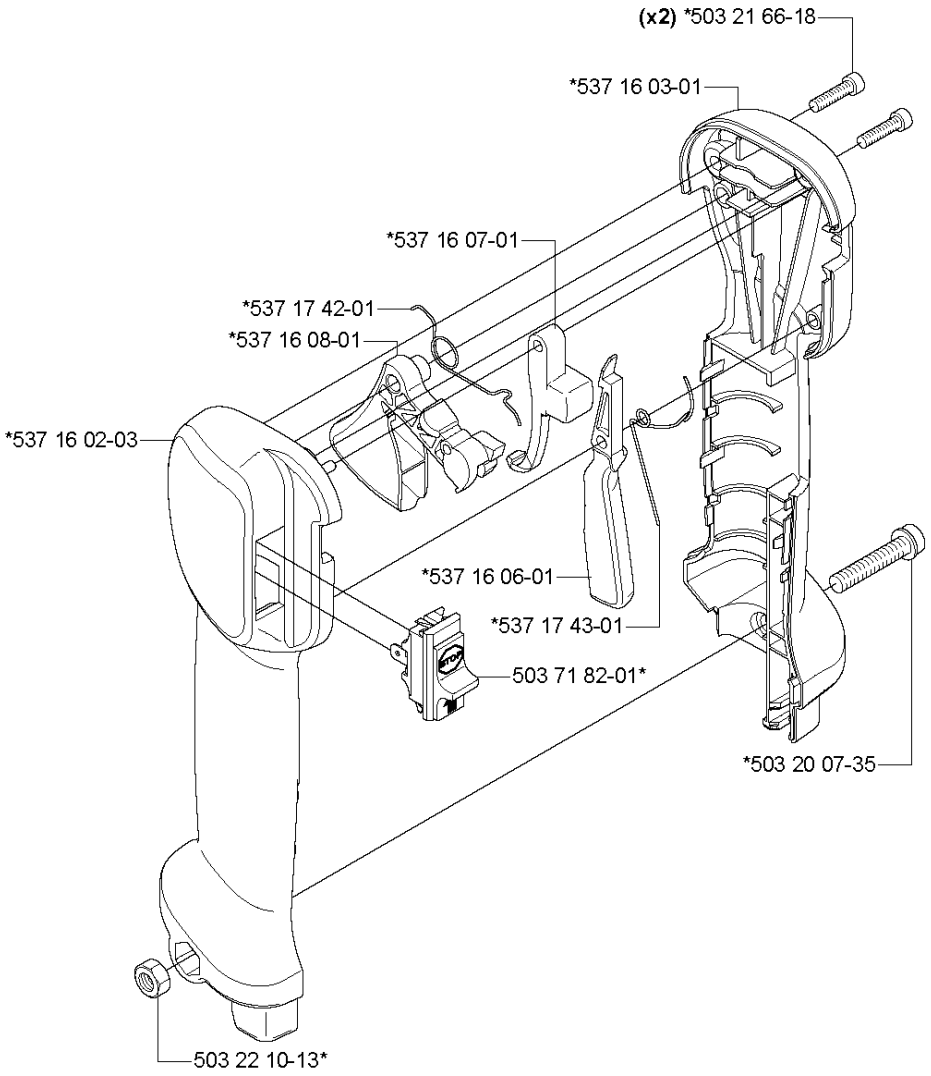

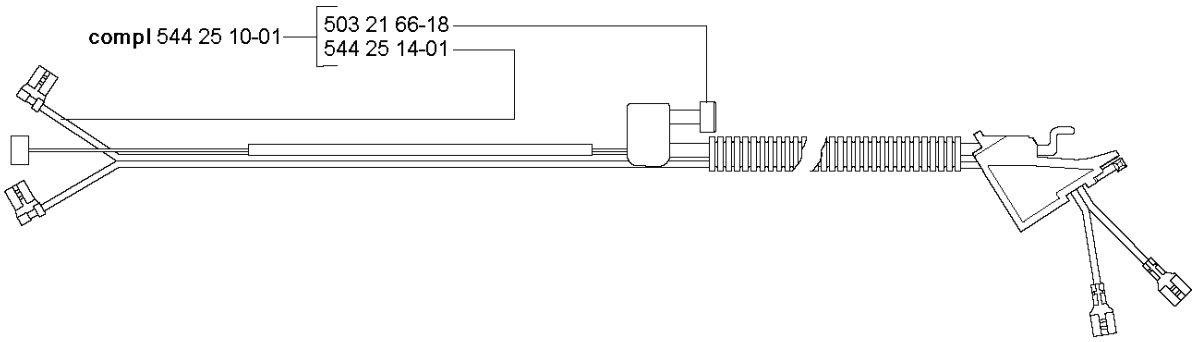

G 235FR, 235R, 235RII

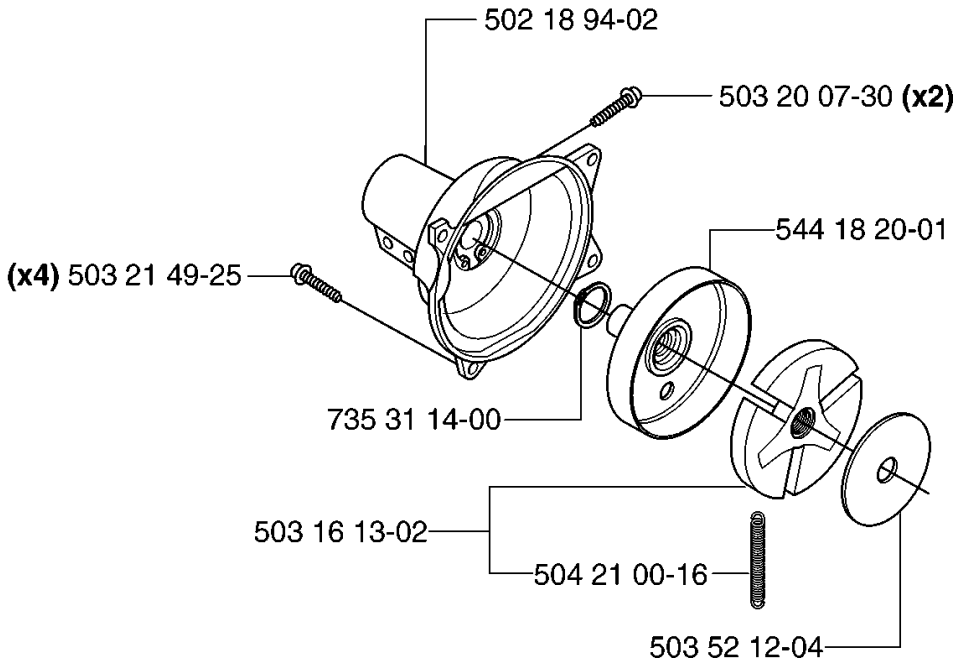

H

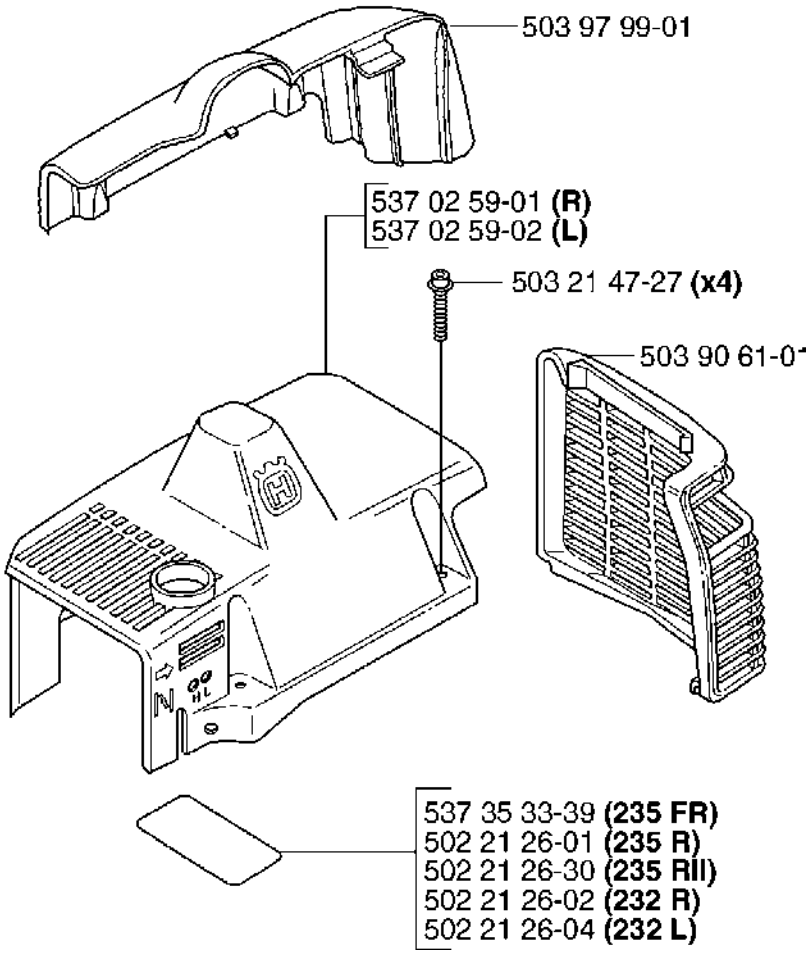
503 97 99-01
537 02 59-01 (R)
537 02 59-02 (L)
503 21 47-27 (x4)
503 90 61-0
537 35 33-39 (235 FR)
502 21 26-01 (235 R)
502 21 26-30 (235 RII)
502 21 26-02 (232 R)
502 21 26-04 (232 L)

J ***compl** 503 90 47-02

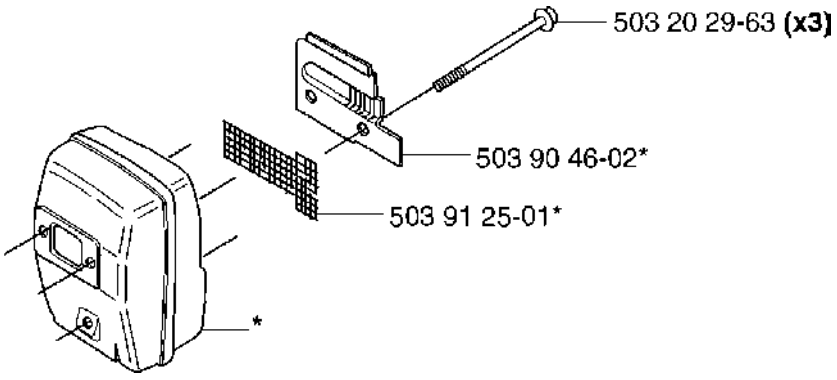

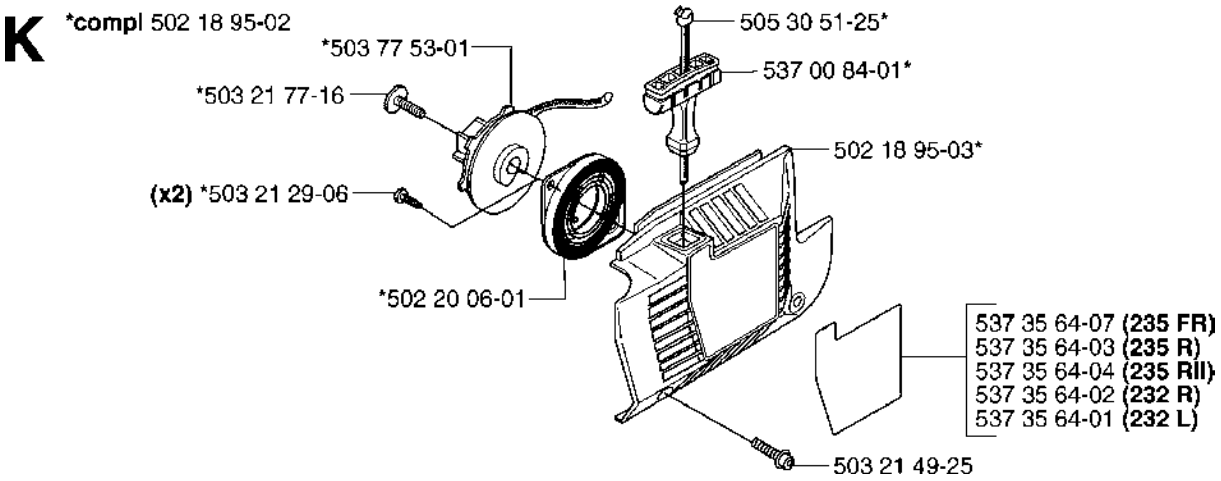
K
*compl 502 18 95-02
*503 77 53-01
*503 21 77-16
(x2) *503 21 29-06
*502 20 06-01
505 30 51-25*
537 00 84-01*
502 18 95-03*
537 35 64-07 (235 FR)
537 35 64-03 (235 R)
537 35 64-04 (235 RII)
537 35 64-02 (232 R)
537 35 64-01 (232 L)
503 21 49-25

L

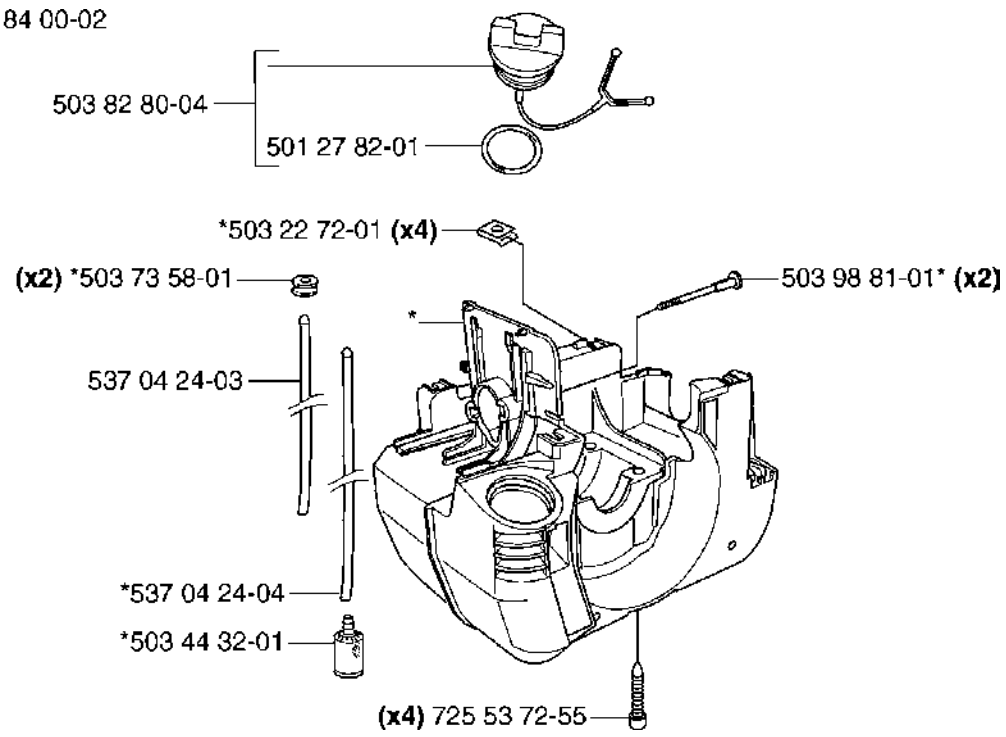
*compl 503 84 00-02
503 82 80-04
501 27 82-01
*503 22 72-01 (x4)
(x2) *503 73 58-01
503 98 81-01* (x2)
*
537 04 24-03
*537 04 24-04
*503 44 32-01
(x4) 725 53 72-55

M

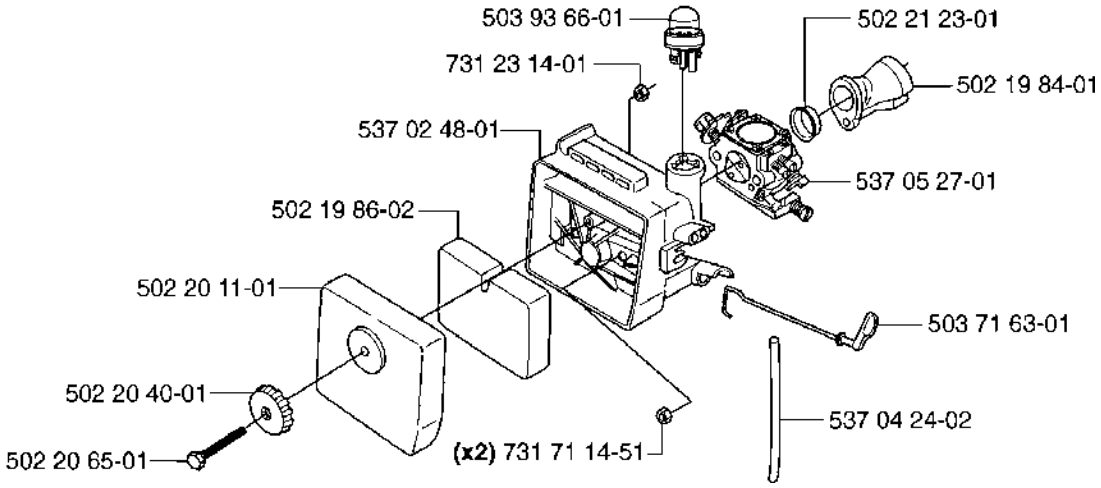
503 93 66-01
502 21 23-01
731 23 14-01
502 19 84-01
537 02 48-01
537 05 27-01
502 19 86-02
502 20 11-01
503 71 63-01
502 20 40-01
537 04 24-02
502 20 65-01
(x2) 731 71 14-51

N ***compl** 503 79 06-01

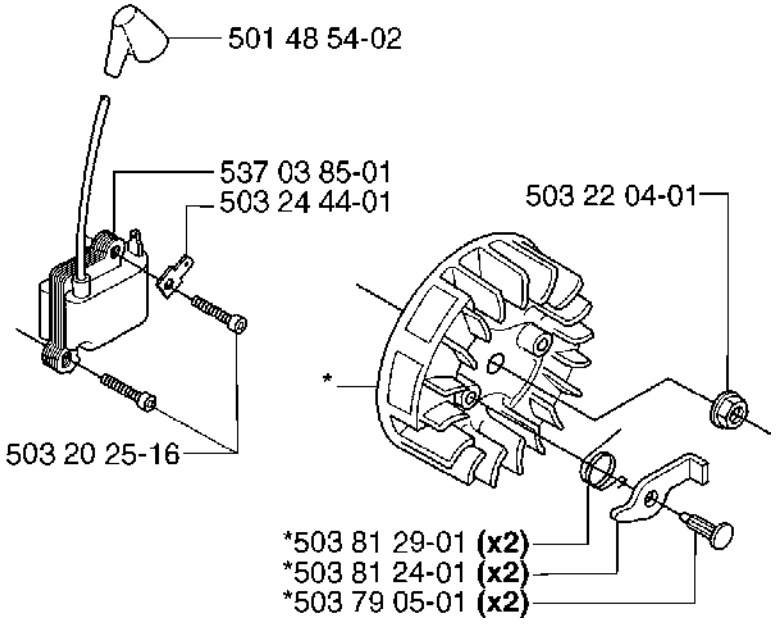

P

***compl** 503 72 80-01 **(232L,R) ø35**
***compl** 503 69 46-01 **(235FR,R) ø38**
***compl** 537 10 41-01 **(235RII) ø40**

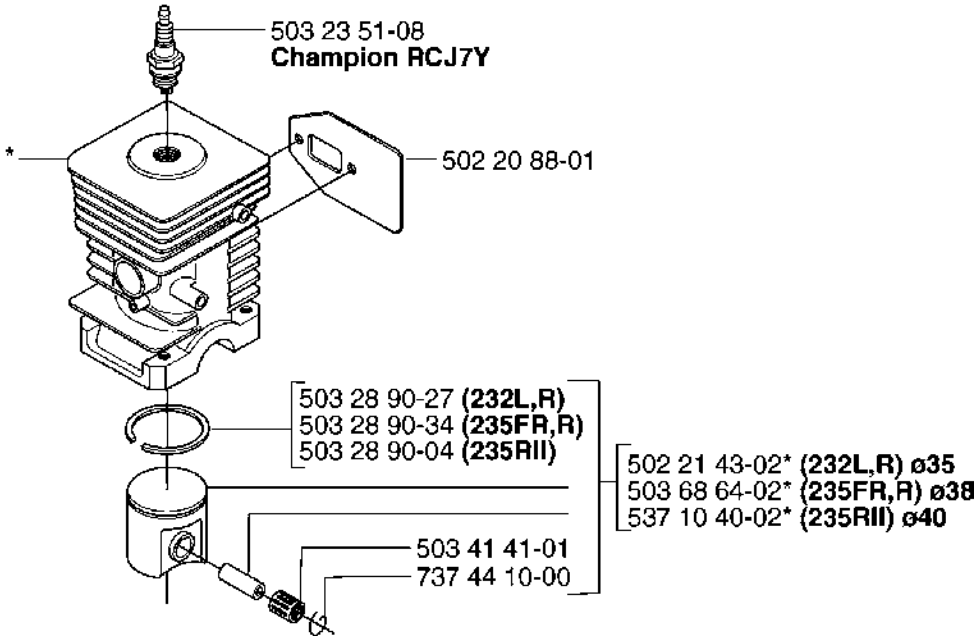

Q ***compl** 502 21 28-04

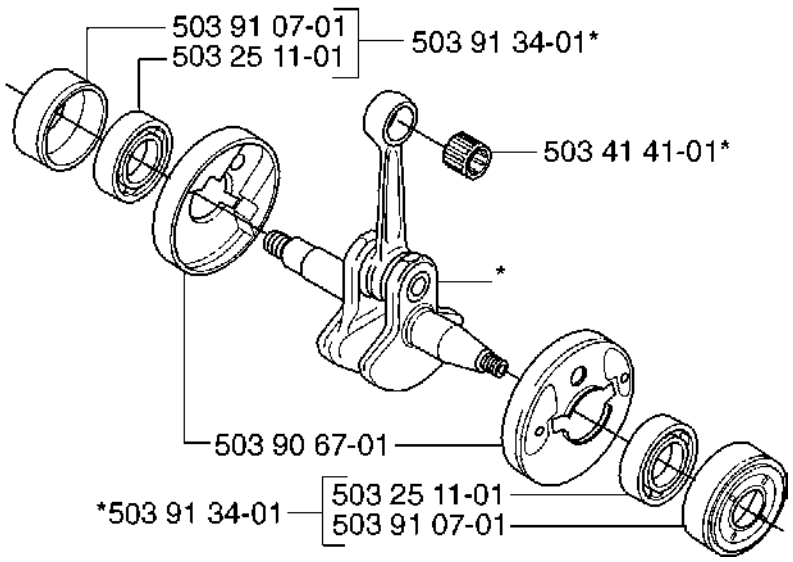

R **compl** 537 05 27-01

Walbro WT 548

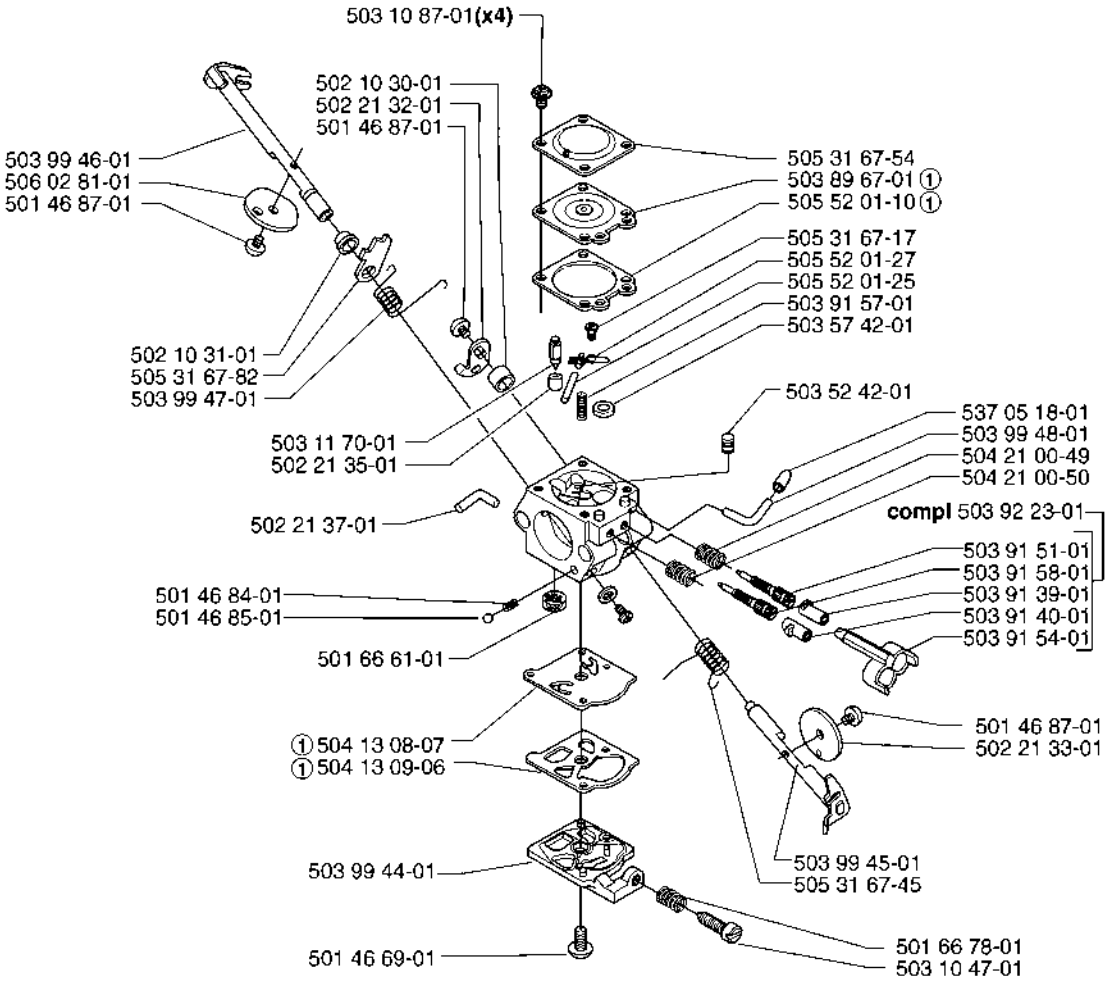

① 530 03 51-73
Set of gaskets
Dichtungssatz
Jeu de joints
Juego de juntas
Packningssats

S Duo Balance

compl 537 27 57-01
compl 537 27 57-03 **US**

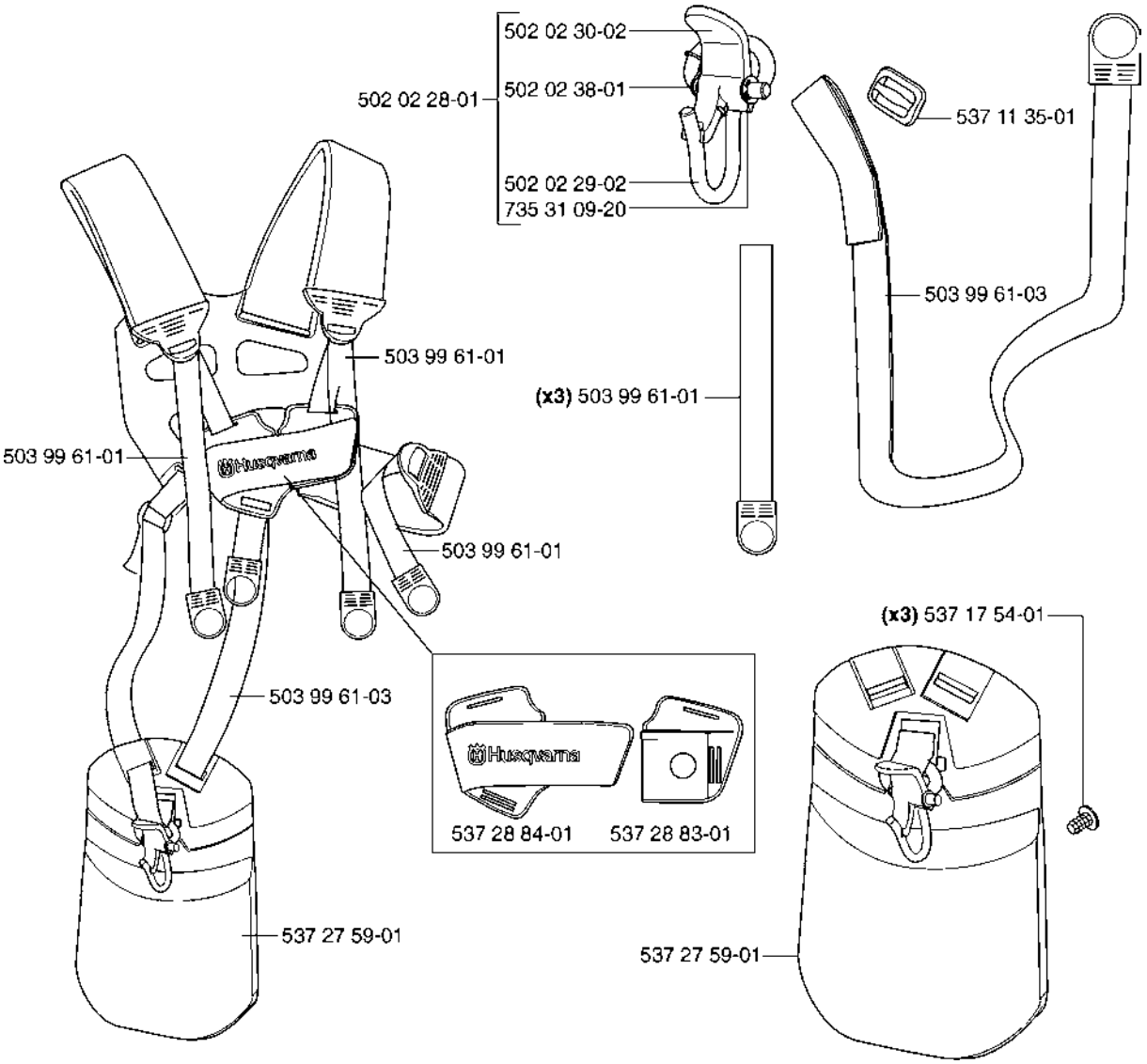

T Accessories
Zubehhöre
Accessoires
Acessorios
Tillbehör

***compl** 502 21 60-01 **(232)**
****compl** 502 21 60-14 **(235)**

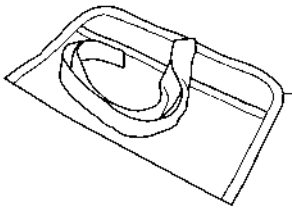
501 19 22-01

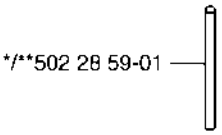
*/**502 28 59-01

Oil Airfilter
Öl Luftfilter
Aceite Filtro Air
Huile Filtera aire
Olja Luftfilter

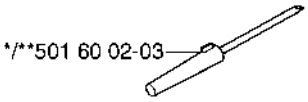
*/**501 60 02-03

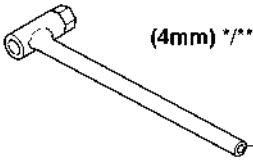
502 11 46-02**/*


(4mm) */**502 21 58-01

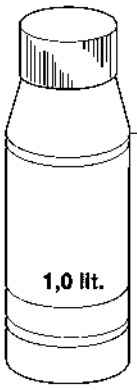

531 00 92-48

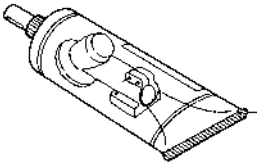
503 97 64-01

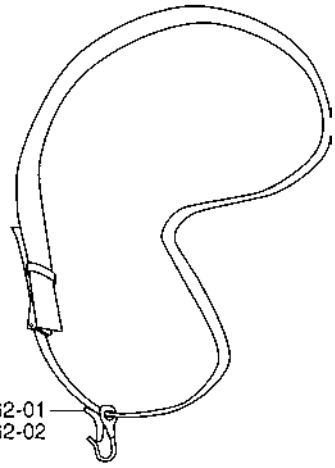
537 21 62-01
(USA) 537 21 62-02

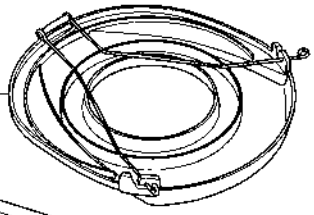
(200-275 mm) 537 31 29-01

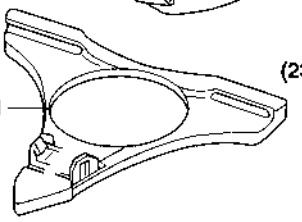
(300mm) 502 26 23-01

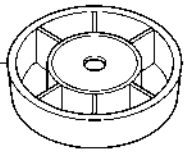
(232L, 232R) 503 89 01-01
(235FR, R, 235RII) 503 89 01-02

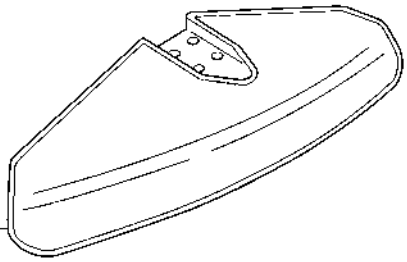
(232R) 503 74 40-01


503 77 63-01

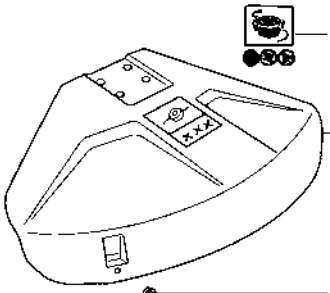

503 74 29-01
(232L,232R) 503 74 50-04

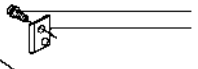
503 21 07-16
503 79 88-01


503 77 63-01

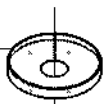
(232L, 232R) 537 29 26-01

U 235FR, 235R, 235RII

***compl** 537 38 77-01

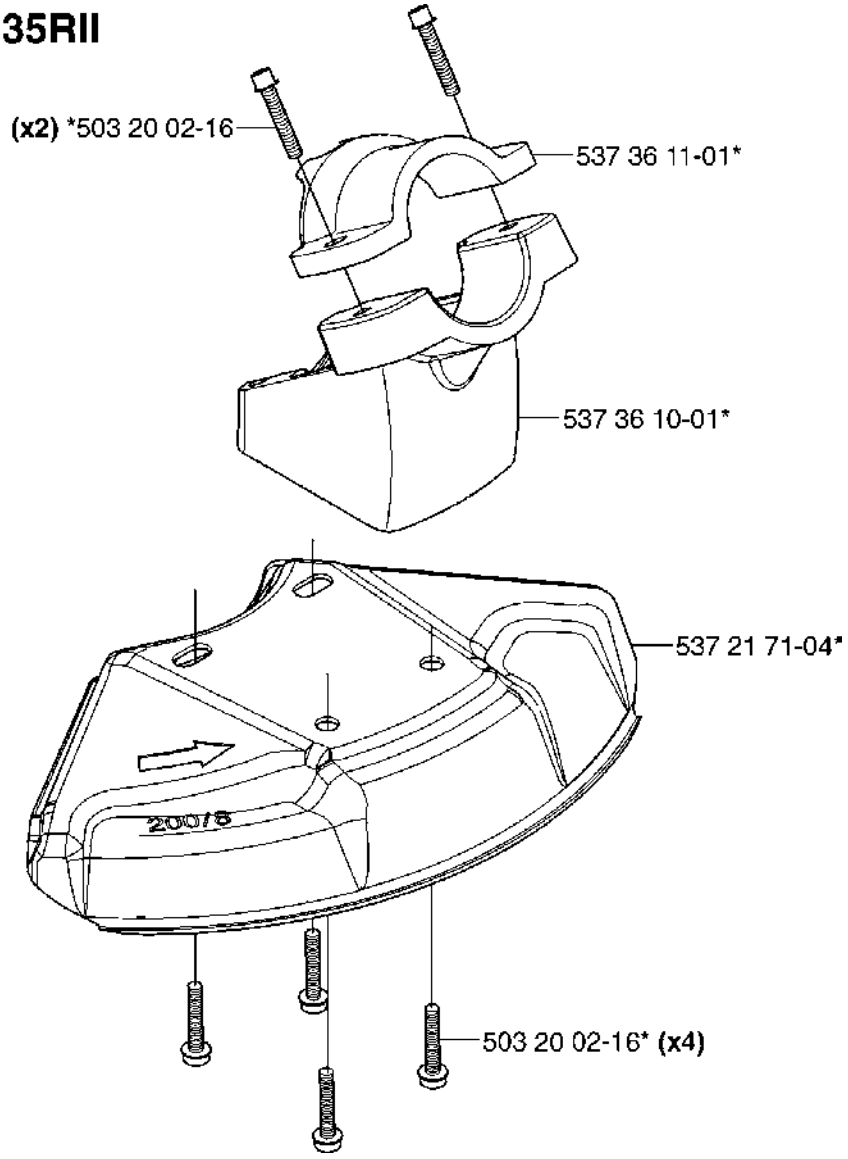

U 235FR, 235R, 235RII

***compl** 537 33 16-01

